Inbound/Outbound CCD
Specification

Interim Version 1.6

Healthix, Inc.
40 Worth St., 5th Floor
New York, NY 10013
1-877-695-4749 Ext. 1
healthix.org

June 23, 2016

About this Document

This Inbound and Outbound *CCD (HITSP) and CCD (C-CDA) and Process - Interim Specification* document explains the functional specifications for a connection between Healthix and a participating organization for the purpose of receiving from the participant a Continuity of Care Document (CCD) that follows the HITSP 32 or HL7 CDA Release 2 standards. The intended audience is project and technical staff at participating organizations and Healthix.

Outbound vs. Inbound

Healthix refers to outbound and inbound transmission from the perspective of its own system. That is, an inbound document is one that is exported from an external system into Healthix.

Continuity of Care Document (CCD) output options

Healthix supports the import of a CCD following either the HITSP C32 standard or the newer Consolidated Clinical Data Architecture (C-CDA) standard. For both CCD standards, Healthix and the participant communicate using the same IHE Technical Framework—only the document payload changes.

Important notes:

- This document maps to HITSP C32 Version 2.5, HITSP C83 Version 2.0 and HL7 CDA Release 2 standards
- The Healthix technical platform is InterSystems HealthShare version 2015.1

Revision History

Version	Date	Author	Description
1.0	March 2, 2015	Nathan Hardesty-Dyck	Interim draft for review Source documents: • BHIX EHR Integration Via IHE Framework (V 1.4) • NYeC Integrating the Healthcare Enterprises (IHE) Specifications (DOC-0104) • HL7 Implementation Guide for CDA Release 2
1.1	March 27, 2015	Nathan Hardesty-Dyck	Incorporate technical review
1.2	June 16, 2015	Naitik Patel	Consolidated CCD Specs. (C32 and CDA)
1.3	August 18, 2015	Naitik Patel	Added XACML section
1.4	May 2, 2016	Naitik Patel	Added consent effective date
1.5	June 23, 2016	Naitik Patel	Added consent rule in XACML for Community Consent
1.6	August 2, 2016	Naitik Patel	Added changes

Table of Contents

1 Introduction 5
1.1 Assumptions 5
2 Documents for Import 6
4 Documents for Retrieval 8
4.1 On-Demand Document Retrieval 9
4.2 Stable Document Retrieval 9
5 Data Access 9
5.1 SAML (User Authorization) 9
5.2 Required SAML Attributes 10
5.3 Example of SAML Assertion 10
6 Transactions 11
6.1 Sending Data to Healthix: Process Summary 11
6.2 Functional Requirements 12
Step 1 - Query Healthix for Patient EMPI 12
Step 2 – Register and Optionally Send Document to Healthix 12
Step 3 – Request a List of Available Documents for Patient 13
Step 4 – Retrieve CCD from Healthix 13
7 CCD Input/Output Options 13
7.1 CCD Content Module Sections and Entries 14
9 Error Handling 105
10 Glossary 105

1 Introduction

Healthix supports the import/export of C32 Continuity of Care Documents (CCD) and C-CDA to and from an external system within an IHE framework. This specification describes both the IHE communication process and the payload Healthix imports, the payload Healthix generates and exports, the CCD document.

References to the IHE Technical Framework throughout this document follow this format:

- Example reference: (IHE ITI TF Vol 2a – 3.18.4.1.2.3.6.2)
    - The hyperlink contains the abbreviated title of the IHE document, as well as a direct link to the document PDF
    - The string after the dash refers to the section within the linked IHE document. The example above refers to section 3.18.4.1.2.3.6.2

1.1 Assumptions

This specification assumes the following:

1. The participant implements a secure **VPN** or **TLS** connection to Healthix for transporting data between Healthix and the participant endpoints
2. All interactions are encrypted on the Internet
3. In the IHE transactions, the participant incorporates **SAML**, which will be used for the following:
    a. User context
    b. An additional layer of security on top of the VPN or TLS layer
4. The participant already has implemented the following connections to Healthix:
    a. Live feed to Healthix for **patient registration**
    b. Live feed to Healthix to provide **patient consent**
5. The participant's system must be capable of generating and receiving the following IHE transactions:
    a. **XDS.b Registry Stored Query (RSQ)** and **Retrieve Document Set (RDS)** messages, according to IHE protocol specifications
    b. Content within the **XDS.b** messages

2 Documents for Import

Healthix supports the import of a Continuity of Care Document (CCD) and C-CDA Continuity of Care Document (CCD).

Note that Healthix assumes that a new CCD contains the complete historical summary of the patient record. Therefore, if Healthix has registered one or more previous CCD documents for the same patient, any subsequent CCD is marked as a replacement for all previous documents.

Interim note: *Healthix is developing support for additional C-CDA document templates other than the CCD. Additional information will be provided in this and separate specifications.*

3 XACML (Consent)

Healthix uses XACML transaction along with the PIX Inquire and Registry query to register patients at Healthix. Participant integrating with Healthix via CCD C32 or CCD CDA must send this XACML in order to register consent for their patients. The payload example can be found below. The actual payload and soap envelope would be the same as XDSb (Provide and Register) message.

Ruel Effect, RuleId and consent effective date are required elements in XACML to communicate consent to Healthix. Healthix uses below values to determine if a data provider has collected a Healthix Consent form, form of consent and consent effective date:

Rule Effect

Healthix uses Rule Effect to determine the value of consent collected by provider:

Rule Effect	Description
Grant	Patient Yes consent
Deny	Patient No consent
Emergncy	Patient Emergency Only consent

Rule ID

Healthix uses RuleID to determine if the consent communicated by participant is Community Cosent or Facility Consent

RuleId	Description
1	Facility Consent
2	Community Consent

Consnet Effetive Date (EnvironmentMatch MatchId)

Healthix uses consent effective date to determine the date on which consent becomes/became effective. This needs to be specified every time a new consent value is registered or changed.

```
<?xml version="1.0" encoding="ASCII"?>
<os:Policy xmlns:os="urn:oasis:names:tc:xacml:2.0:policy:schema:os" xmlns:v3="urn:hl7-org:v3"
PolicyId="2016-01-27-15-56-20-0000450" RuleCombiningAlgId="urn:oasis:names:tc:xacml:1.0:rule-
combining-algorithm:first-applicable">
 <os:Description>XACML POLICY</os:Description>
 <os:Target>
  <os:Resources>
   <os:Resource>
    <os:ResourceMatch MatchId="http://www.hhs.gov/healthit/nhin/function#instance-identifier-
equal">
     <os:AttributeValue DataType="urn:hl7-org:v3#II"><v3:PatientId
root="2.16.840.1.113883.4.391.1.3983" extension="551920"/></os:AttributeValue>
     <os:ResourceAttributeDesignator AttributeId="http://www.hhs.gov/healthit/nhin#subject-id"
DataType="urn:hl7-org:v3#II"/>
    </os:ResourceMatch>
   </os:Resource>
  </os:Resources>
 </os:Target>
 <os:Rule Effect="Permit" RuleId="1">
  <os:Target>
   <os:Subjects>
    <os:Subject>
     <os:SubjectMatch MatchId="urn:oasis:names:tc:xacml:1.0:function:anyURI-equal">
      <os:AttributeValue
DataType="http://www.w3.org/2001/XMLSchema#anyURI">urn:oid:2.16.840.1.113883.4.391.1.3983</
os:AttributeValue>
      <os:SubjectAttributeDesignator AttributeId="urn:oasis:names:tc:xspa:1.0:subject:organization-id"
DataType="http://www.w3.org/2001/XMLSchema#anyURI"/>
     </os:SubjectMatch>
    </os:Subject>
   </os:Subjects>
        <os:Environments>
<os:Environment>
<os:EnvironmentMatch MatchId="urn:oasis:names:tc:xacml:1.0:function:date-greather-than-or-equal">
<os:AttributeValue DataType="http://www.w3.org/2001/XMLSchema#date">2015-11-
09</os:AttributeValue>
<os:EnvironmentAttributeDesignator AttributeId="http://www.hhs.gov/healthit/nhin#rule-start-date"
DataType="http://www.w3.org/2001/XMLSchema#date"/>
</os:EnvironmentMatch>
</os:Environment>
<os:Environment>
<os:EnvironmentMatch MatchId="urn:oasis:names:tc:xacml:1.0:function:date-less-than-or-equal">
<os:AttributeValue DataType="http://www.w3.org/2001/XMLSchema#date">2016-12-
31</os:AttributeValue>
<os:EnvironmentAttributeDesignator AttributeId="http://www.hhs.gov/healthit/nhin#rule-end-date"
DataType="http://www.w3.org/2001/XMLSchema#date"/>
```

```
</os:EnvironmentMatch>
</os:Environment>
</os:Environments>
   </os:Target>
 </os:Rule>
<os:Rule Effect="Permit" RuleId="2">
   <os:Target>
    <os:Subjects>
     <os:Subject>
      <os:SubjectMatch MatchId="urn:oasis:names:tc:xacml:1.0:function:anyURI-equal">
       <AttributeValue
DataType="http://www.w3.org/2001/XMLSchema#anyURI">CommunityConsent</AttributeValue>
        <os:SubjectAttributeDesignator AttributeId="urn:oasis:names:tc:xspa:1.0:subject:organization-id"
DataType="http://www.w3.org/2001/XMLSchema#anyURI"/>
      </os:SubjectMatch>
     </os:Subject>
    </os:Subjects>
          <os:Environments>
<os:Environment>
<os:EnvironmentMatch MatchId="urn:oasis:names:tc:xacml:1.0:function:date-greather-than-or-equal">
<os:AttributeValue DataType="http://www.w3.org/2001/XMLSchema#date">2015-11-
09</os:AttributeValue>
<os:EnvironmentAttributeDesignator AttributeId="http://www.hhs.gov/healthit/nhin#rule-start-date"
DataType="http://www.w3.org/2001/XMLSchema#date"/>
</os:EnvironmentMatch>
</os:Environment>
<os:Environment>
<os:EnvironmentMatch MatchId="urn:oasis:names:tc:xacml:1.0:function:date-less-than-or-equal">
<os:AttributeValue DataType="http://www.w3.org/2001/XMLSchema#date">2016-12-
31</os:AttributeValue>
<os:EnvironmentAttributeDesignator AttributeId="http://www.hhs.gov/healthit/nhin#rule-end-date"
DataType="http://www.w3.org/2001/XMLSchema#date"/>
</os:EnvironmentMatch>
</os:Environment>
</os:Environments>
   </os:Target>
 </os:Rule>
</os:Policy>
```

4 Documents for Retrieval

Healthix supports delivery of either a stable document stored within Healthix or an on-demand document that Healthix generates in real time. During project implementation, the participant and Healthix decide whether to use on-demand or stable document retrieval.

The participant indicates the type of document using the **XDSDocumentEntry.objectType** attribute of the **XDS.b RSQ** message (IHE ITI TF Vol 2a – 3.18.4.1.2.3.6.2).

XDSDocumentEntry.objectType Attribute		UUID
For:	STABLE document	urn:uuid:7edca82f-054d-47f2-a032-9b2a5b5186c1
	ON-DEMAND document	urn:uuid:34268e47-fdf5-41a6-ba33-82133c465248

Interim note: *Healthix is actively developing its interface to support all different exports for stable or on-demand C32 and C-CDA standards. This specification might get updated/modified as result of development and testing activities going on for this effort.*

4.1 On-Demand Document Retrieval

The on-demand document type provides participants the ability to retrieve a CCD with content that Healthix assembles at the instant the document retrieve request is processed.

For example, when Healthix receives an **XDS.b RSQ** message and that message also includes an **XDSDocumentEntry.objectType** attribute for an **on-demand** document, Healthix understands that the requested CCD is an on-demand document that may be assembled from multiple sources and returns the document ID of the on-demand CCD. In response to the participant's **XDS.b RDS** message, Healthix assembles and sends the on-demand CCD.

4.2 Stable Document Retrieval

A stable document is one that Healthix already stores in its document repository. There is no step in this process to generate a CCD.

For example, when Healthix receives an **XDS.b RSQ** message and that message also includes an **XDSDocumentEntry.objectType** attribute for a **stable** document, Healthix understands that the requested CCD is a stable document and returns existing document's document ID. In response to the participant's **XDS.b RDS** message, Healthix retrieves the specified stable document and sends it to the participant.

5 Data Access

5.1 SAML (User Authorization)

Security Assertion Markup Language (SAML) is an XML-based open standard data forma for exchanging authentication and authorization data between an identify provider and a service provider. Healthix relies on SAML assertions to make access control decisions.

SAML authorization is used to identify the user or system that is associated with the IHE transaction. The user identified in the SAML is recorded within Healthix's audit log to preserve a record of who accessed what patient's health information.

Interim note: *Healthix's new version of HealthShare uses an updated version of SAML. The SAML standard described here is subject to change.*

5.2 Required SAML Attributes

The SAML assertion must contain an attribute statement that contains these three main attributes:

- **UserName** – The designated username may be either an actual user name or a system account
- **UserOrganization** – The value of this attribute may be the actual organization, or a parent organization, or the name of a single hub through which IHE transactions flow. The purpose of the value is to identify a single source of user names. This value is mapped by Healthix to a HealthShare security domain
- **OrganizationID / UserOrganizationOID** – This value must be the HL7-registered OID of the originating facility of the IHE transaction. The value may exist in either of these two attributes

5.3 Example of SAML Assertion

```
<saml:Assertion xmlns:s=http://www.w3.org/2001/XMLSchema
  xmlns:saml="urn:oasis:names:tc:SAML:2.0:assertion" ID="a4f3464a-7dd4-41f7-907b-b0cb5dbb3fb7"
  IssueInstant="2013-08-27T20:36:02.966Z" Version="2.0">
  <saml:Issuer Format="urn:oasis:names:tc:SAML:2.0:nameid-format:X509SubjectName"> OU=Equifax
    Secure Certificate Authority, O=Equifax, C=US</saml:Issuer>
  <Signature xmlns="http://www.w3.org/2000/09/xmldsig#">
    <SignedInfo>
      <CanonicalizationMethod Algorithm="http://www.w3.org/TR/2001/REC-xml-c14n-20010315#WithComments"/>
      <SignatureMethod Algorithm="http://www.w3.org/2000/09/xmldsig#rsa-sha1"/>
      <Reference URI="#a4f3464a-7dd4-41f7-907b-b0cb5dbb3fb7">
        <Transforms>
          <Transform Algorithm="http://www.w3.org/2000/09/xmldsig#enveloped-signature"/>
        </Transforms>
        <DigestMethod Algorithm="http://www.w3.org/2000/09/xmldsig#sha1"/>
        <DigestValue>PVXypI5FBRXEuEyHB71zqAFD/OI=</DigestValue>
      </Reference>
    </SignedInfo>
    <SignatureValue>deidentified</SignatureValue>
    <KeyInfo>
      <X509Data>
        <X509Certificate>deidentified</X509Certificate>
      </X509Data>
    </KeyInfo>
  </Signature>
  <saml:Subject>
    <saml:NameID Format="urn:oasis:names:tc:SAML:2.0:nameid-format:X509SubjectName">
      deidentified</saml:NameID>
    <saml:SubjectConfirmation Method="urn:oasis:names:tc:SAML:2.0:cm:sender-vouches">
      <saml:NameID Format="urn:oasis:names:tc:SAML:2.0:nameid-format:X509SubjectName">
        deidentified</saml:NameID>
    </saml:SubjectConfirmation>
  </saml:Subject>
  <saml:Conditions NotBefore="2013-08-27T19:36:02.966Z" NotOnOrAfter="2013-08-27T21:36:02.966Z"/>
  <saml:AuthnStatement AuthnInstant="2013-08-27T20:36:02.966Z">
    <saml:SubjectLocality Address="10.1.100.35" DNSName="ShinnyClient"/>
    <saml:AuthnContext>
      <saml:AuthnContextClassRef>
        urn:oasis:names:tc:SAML:2.0:ac:classes:X509</saml:AuthnContextClassRef>
      <saml:AuthenticatingAuthority>deidentified</saml:AuthenticatingAuthority>
    </saml:AuthnContext>
  </saml:AuthnStatement>
  <saml:AttributeStatement>
    <saml:Attribute Name="UserName" NameFormat="http://www.hhs.gov/healthit/nhin">
      <saml:AttributeValue>deidentified</saml:AttributeValue>
    </saml:Attribute>
    <saml:Attribute Name="UserOrganization" NameFormat="http://www.hhs.gov/healthit/nhin">
      <saml:AttributeValue>deidentified</saml:AttributeValue>
    </saml:Attribute>
    <saml:Attribute Name="UserOrganizationOID" NameFormat="http://www.hhs.gov/healthit/nhin">
      <saml:AttributeValue>deidentified</saml:AttributeValue>
    </saml:Attribute>
  </saml:AttributeStatement>
</saml:Assertion>
```

6 Transactions

6.1 Sending Data to Healthix: Process Summary

Goal	The ability for a participant to retrieve, and register patient demographic and clinical data with Healthix via a CCD.
Primary actors	• Patient Identity Feed HL7v2 (ITI 8) • Register Document Set-b (ITI 42) • Provide and Register Document Set-b (ITI 41)
Trigger	Participant registers patient demographic and/or clinical data with Healthix. Participant queries for patient EMPI deterministically, using as parameters both the MRN and the assigning authority. Then, client uses EMPI to query for patient CCD.
Main Success Scenario	• Participant either retrieves EMPI via a PIX Query or receives a "Patient Not Found" message. If the patient cannot be found, the participant cannot continue with the process. • If patient EMPI is retrieved, the participant registers and optionally sends clinical data for the patient via a CCD or other document or can obtains the list of available documents for the patient via a Registry Stored Query. • Participant retrieves the CCD and displays it to its end users.

Interim note: *A separate specification describing the IHE Technical Framework implementation at Healthix is under development. The specification will include details of the PIX Query exchange.*

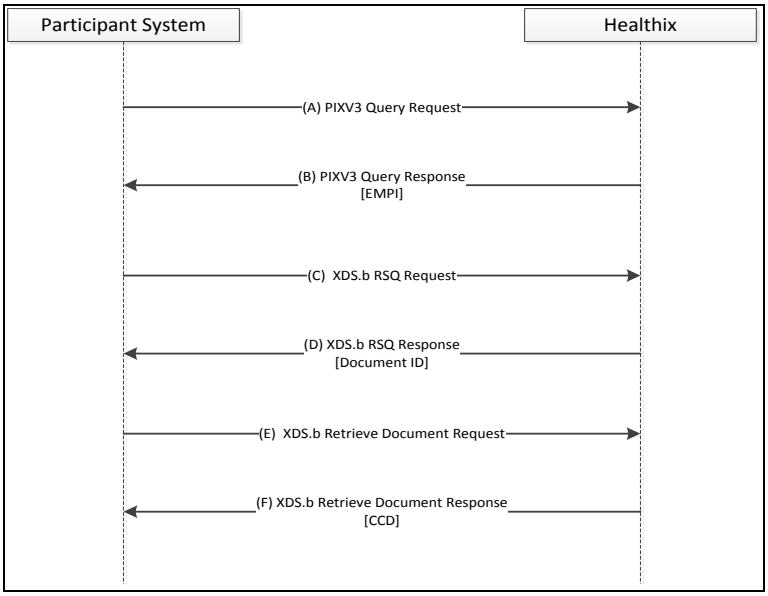

Figure 1 – Sending Data to Healthix Process

6.2 Functional Requirements

Step 1 - Query Healthix for Patient EMPI

A. Participant sends a PIX Query to the Healthix PIX manager endpoint containing the local patient identifier (MRN) and demographic information.
B. Healthix responds with the EMPI for the patient.

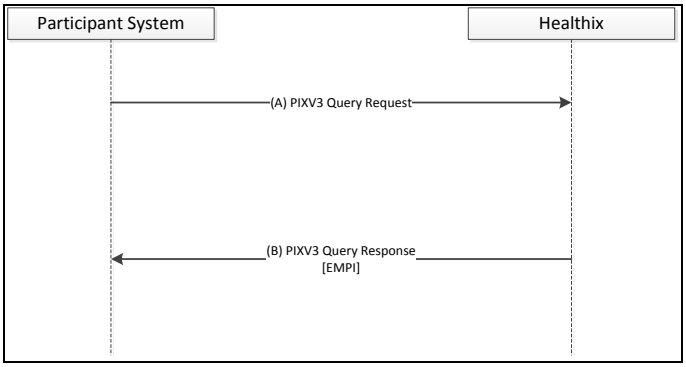

Figure 2 – PIX Query for EMPI

Step 2 – Register and Optionally Send Document to Healthix

A. Participant sends one of the following XDS.b messages to Healthix, according to the project implementation:
    i. Register Document Set (RDS) – Sent if the participant will act as the document repository, and Healthix will simply register (and not store) the document.
    ii. Provide and Register Document Set (PNR) – Send if Healthix will act as the document repository and both will register and store the document.

Interim note: *In the interest of efficiently providing data to participants, Healthix may support only the Provide and Register Document Set (PNR) rather than provide the option to register—and not provide—the document.*

B. Healthix registers the document and, if the participant system sent a PNR message, stores and digests the document.
C. Healthix responds with a success RDS or PNR message.

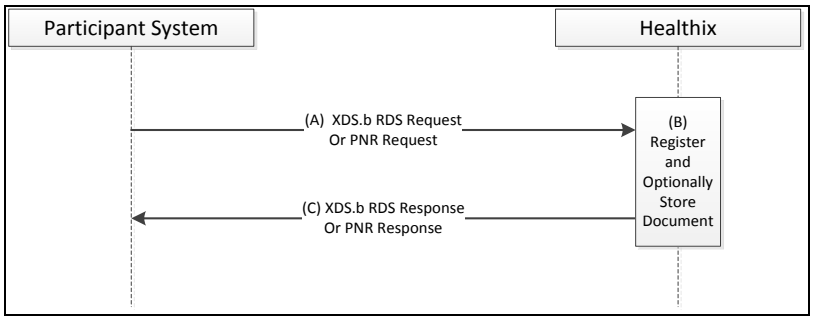

Figure 3 – Register and Send a Document

Step 3 – Request a List of Available Documents for Patient

A. Participant sends XDS.b Registry Stored Query (RSQ) to the Healthix document registry endpoint containing the EMPI and optional list of supported filter criteria.
B. Healthix dynamically generates the CCD (C32) document and inserts it into the Healthix registry and repository.
C. Healthix responds with a list of available documents, including stable documents and the dynamically generated CCD.

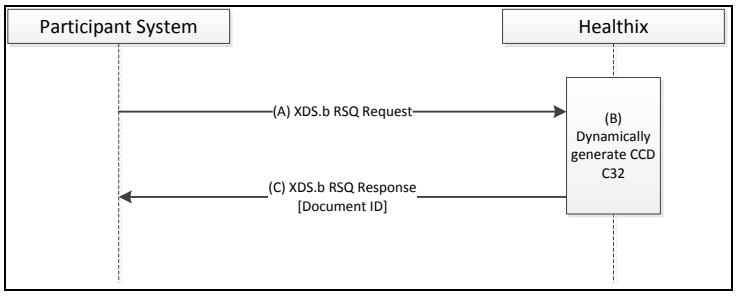

Figure 3 – Request for documents

Step 4 – Retrieve CCD from Healthix

A. Participant requests the CCD (C32) whose Document ID was returned in Step 2 above using an XDS.b Retrieve Document Set (RDS) sent to Healthix.
B. Healthix sends a response with the CCD (C32).

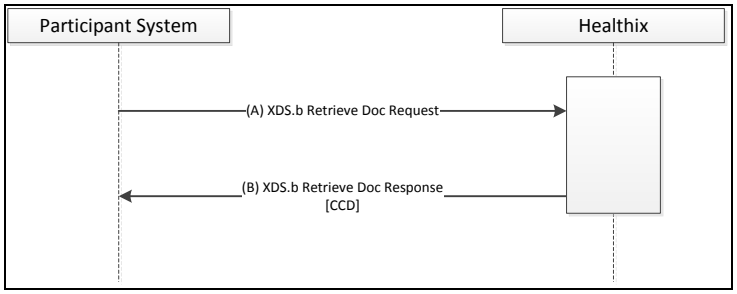

Figure 4 – Retrieval of document

7 CCD Input/Output Options

Healthix supports the import, generation and export of a CCD following the HITSP C32 CCD and HL7 CDA Release 2 (C-CDA) standards

This document that contains particular Sections and Entries defined in the HITSP C32 CCD and HL7 C-CDA standards. Please reference the HITSP C32 CCD, HITSP C83 CDA Content Module, HL7 CCD standard and HL7 IHE Health Story Consolidation standard standards for specific C32 CCD and C-CDA and details.

7.1 CCD Content Module Sections and Entries

Healthix supports importing, generation and exporting of discrete data from C32 CCD and C-CDA CCD Content Module Sections and their associated Entries according to the following table:

Data Element ID	Section Name	Opt/Repeat[1]	Data Source	Additional Specification and/or Constraint
Person Information Module				
1.01	Document Timestamp	R/N	/cda:ClinicalDocument/cda:effectiveTime	
	PATIENT INFORMATION EVENT ENTRY	R/N	/cda:ClinicalDocument/cda:recordTarget/ cda:patientRole	
1.02	Person ID	R/N	cda:id	
1.03	Person Address	R/Y	cda:addr	2.2.1.2.2
1.04	Person Phone/Email/URL	R/Y	cda:telecom	2.2.1.2.3
	PERSONAL INFORMATION		cda:patient	
1.05	Person Name	R/Y	cda:name	2.2.1.2.1
1.06	Gender	R/N	cda:administrativeGenderCode	2.2.1.2.4
1.07	Person Date of Birth	R/N	cda:birthTime	
1.08	Marital Status	R2/	cda:maritalStatusCode	2.2.1.2.5
1.09	Religious Affiliation	R/N	cda:religiousAffiliationCode	2.2.1.2.8
1.10	Race	R/Y	cda:raceCode sdtc:raceCode	2.2.1.2.6
1.11	Ethnicity	R/N	cda:ethnicGroupCode	2.2.1.2.7
Language Spoken Module				
2.01	Language	R/Y	cda:recordTarget/cda:patientRole/cda:patient/ cda:languageCommunication/cda:languageCode	2.2.1.3.1
Support Module				
	SUPPORT	R2/Y	/cda:ClinicalDocument/cda:participant	
3.01	Date	R/N	cda:time	
	CONTACT	R2/Y	cda:associatedEntity or cda:patientRole/cda:patient/cda:guardian	
3.02	Contact Type	R/N	@classCode	2.2.1.4.1
3.03	Contact Relationship	R2/N	cda:code	2.2.1.4.2
3.04	Contact Address	R2/Y	cda:addr	
3.05	Contact Phone/Email/URL	R2/Y	cda:telecom	
3.06	Contact Name	R/Y	cda:associatedPerson/cda:name or cda:guardianPerson/cda:name	

Healthcare Provider Module				
	PROVIDER	R2/Y	/cda:ClinicalDocument/cda:documentationOf/ cda:serviceEvent/cda:performer	2.2.1.5.1
4.01	Date Range	R/N	cda:time	
4.02	Provider Role Coded	R2/N	cda:functionCode	2.2.1.5.2
4.03	Provider Role Free Text	R2/N	cda:originalText	2.2.1.5.2
	PROVIDER ENTITY	R/Y	cda:assignedEntity	
4.04	Provider Type	R2/N	cda:code	2.2.1.5.3
4.05	Provider Address	R2/Y	cda:addr	
4.06	Provider Phone/Email/URL	R2/Y	cda:telecom	
4.07	Provider Name	R2/N	cda:assignedPerson/cda:name	
4.08	Provider's Organization Name	R2/Y	cda:representedOrganization/cda:name	
4.09	Provider's ID	R2/N	sdtc:patient/sdtc:id	
Insurance Provider Module				
	PAYMENT PROVIDER EVENT ENTRY	R2/Y	cda:act[cda:templateId/@root= '2.16.840.1.113883.10.20.1.26']	2.2.1.6.1
5.01	Group Number	O/N	cda:id	2.2.1.6.2
5.02	Health Insurance Type	R2/N	cda:code	2.2.1.6.3
	PAYER	R/N	cda:performer/cda:assignedEntity	
5.03	Health Plan Insurance Information Source ID	O/Y	cda:id RxBIN OID=2.16.840.1.113883.3.88.3.1 RxPCN OID=2.16.840.1.113883.3.88.3.1 + numeric identifier used in the RxBIN	2.2.1.6.3
5.04	Health Plan Insurance Information Source Address	O/Y	cda:addr	
5.05	Health Plan Insurance Information Source Phone/Email/URL	O/Y	cda:telecom	
5.06	Health Plan Insurance Information Source Name	R2/N	cda:representedOrganization/cda:name	
	MEMBER INFORMATION	R2/N	cda:participant[@typeCode='COV']	2.2.1.6.5

5.07	Health Plan Coverage Dates	R2/N	cda:time	2.2.1.6.6 Constraint: The date coverage began should be recorded in the <low> element of the <time> element; the date coverage ends should be recorded in the <high> element of the <time> element.
	PATIENT	R/N	cda:participantRole[@classCode='PAT']	
5.08	Member ID	R2/N	cda:id	2.2.1.6.7
5.09	Patient Relationship to Subscriber	R/N	cda:code	2.2.1.6.8
5.10	Patient Address	R2/Y	cda:addr	
5.11	Patient Phone/Email/URL	R2/Y	cda:telecom	
5.12	Patient Name	R/N	cda:playingEntity/cda:name	2.2.1.6.9
5.13	Patient Date of Birth	R/N	cda:playingEntity/sdtc:birthTime	2.2.1.6.10
5.14	Financial Responsibility Party Type	R/N	cda:performer/cda:assignedEntity/cda:code	2.2.1.6.11
	SUBSCRIBER INFORMATION	R2/N	cda:participant[@typeCode='HLD']/ cda:participantRole	2.2.1.6.12
5.15	Subscriber ID	R/N	cda:id	2.2.1.6.13
5.16	Subscriber Address	R/N	cda:addr	
5.17	Subscriber Phone/Email/URL	R2/Y	cda:telecom	
5.18	Subscriber Name	R/N	cda:playingEntity/cda:name	
5.19	Subscriber Date of Birth	R/N	cda:playingEntity/sdtc:birthTime	2.2.1.6.14
	GUARANTOR INFORMATION	R2/Y	cda:performer[cda:assignedEntity/cda:code[@code='' and @codeSystem='']	
5.20	Effective Date of Financial Responsibility	R2/N	cda:time	
5.21	Financial Responsibility Party Address	R2/Y	cda:assignedEntity/cda:addr	
5.22	Financial Responsibility Party Phone/Email/URL	R2/Y	cda:assignedEntity/cda:telecom	

5.23	Financial Responsibility Party Name	R2/N	cda:assignedEntity/cda:assignedPerson/ cda:name - AND/OR - cda:assignedEntity/ cda:representedOrganization/ cda:name	
	HEALTH PLAN	R2/N	cda:entryRelationship[@typeCode='REFR']/ cda:act[@classCode='ACT' and @moodCode='DEF']	2.2.1.6.15
5.24	Health Plan Name	R2/N	cda:text	2.2.1.6.16
Allergy/Drug Sensitivity Module				
	ADVERSE EVENT ENTRY	R2/Y	cda:act[cda:templateId/@root= '2.16.840.1.113883.10.20.1.27']/ cda:entryRelationship[@typeCode='SUBJ']/ cda:observation[cda:templateId/@root= '2.16.840.1.113883.10.20.1.18']	
6.01	Adverse Event Date	R2/N	cda:effectiveTime	
6.02	Adverse Event Type	R/N	cda:code	2.2.1.7.1
missing	Alert type code	O/N	cda:act/cda:entryRelationship/cda:observation/cda:value/[@xsi:type="CD"]	
	PRODUCT	R2/Y	cda:participant[@typeCode='CSM']/ cda:participantRole[@classCode='MANU']/ cda:playingEntity[@classCode='MMAT']/	
6.03	Product Free-Text	R/N	cda:name	
6.04	Product Coded	R2/N	cda:code	2.2.1.7.2 Adverse Event Vocabulary Constraint: UNII=Food+substance allergy, RxNorm=Medication Allergy, NDF-RT=Classes of medications
	REACTION	O/Y	cda:entryRelationship[@typeCode='MFST']/ cda:observation[templateId/@root= '2.16.840.1.113883.10.20.1.54'] VA/KP Problem List Subset of SNOMED CT	
6.05	Reaction Free-Text	R2/N	cda:text	
6.06	Reaction Coded	R2/N	cda:value	2.2.1.7.3

	SEVERITY	R2/N	cda:entryRelationship[@typeCode='SUBJ']/ cda:observation[templateId/@root='2.16.840.1.113883.10.20.1.55'] Subset of SNOMED CT Preferred Terms for Severity	
6.07	Severity Free-Text	R2/N	cda:text	
6.08	Severity Coded	R2/N	cda:value	2.2.1.7.4
missing	Allergy Status	O/N	cda:entryRelationship/[cda:observation/cda:code/@code="33999-4]/cda:observation/cda:value/@code	
Condition Module				
	PROBLEM ENTRY	R2/Y	cda:act[cda:templateId/@root='2.16.840.1.113883.10.20.1.27']/ cda:entryRelationship[@typeCode='SUBJ']/ cda:observation[cda:templateId/@root='2.16.840.1.113883.10.20.1.28']	
7.01	Problem Date	R2/N	cda:effectiveTime	2.2.1.8.1 Constraints: <low> element = onset date; <high> element = resolution date
7.02	Problem Type	R2/N	cda:code	2.2.1.8.2
7.03	Problem Name	R/N	cda:text	2.2.1.8.3 Constraints: <reference> entry where value attribue = narrative text containing the name of the problem
7.04	Problem Code	O/N	cda:value	2.2.1.8.4 Constraints: Record in the <value> element using the CD Type
missing	Problem Status		cda:entryRelationship/[cda:observation/cda:code/@code="33999-4]/cda:observation/cda:value/@code	

7.05	Treating Provider	O/Y	cda:act[cda:templateId/@root= '2.16.840.1.113883.10.20.1.27']/ cda:performer	2.2.1.8.5 Constraints: <time> element = time over which the provider treated the condition; <id> element= identifer of the treating provider (Table 2.2.1.5); <performer> element = treating provider or providers
Medication (Rx & Non-Rx) Module				
	ADMINISTRATION INFORMATION EVENT ENTRY	R2/Y	cda:substanceAdministration[cda:templateId/@root = '2.16.840.1.113883.10.20.1.24']	
8.01	Free Text Sig	O/N	cda:text	2.2.1.9.1 Constraints: shall contain a <reference> element whose value attribute points to the text of the free text sig in the narrative portion of the CCD
8.02	Indicate Medication Stopped	O/N	cda:effectiveTime[1]/cda:high	2.2.1.9.2
8.03	Administration Timing	O/Y	cda:effectiveTime[2]	2.2.1.9.3 Constraints (8)
8.04	Frequency	O/Y	cda:effectiveTime[2]	2.2.1.9.3 Constraints (8)
8.05	Interval	O/Y	cda:effectiveTime[2]	2.2.1.9.3 Constraints (8)
8.06	Duration	O/Y	cda:effectiveTime[2]	2.2.1.9.3 Constraints (8)
8.07	Route	O/Y	cda:routeCode	2.2.1.9.4
8.08	Dose	O/Y	cda:doseQuantity	2.2.1.9.5 Constraints (3)

8.09	Site	O/Y	cda:approachSiteCode	2.2.1.9.6 Constraints: Site of medication administration recorded in <administrativeSiteCode>
8.10	Dose Restriction	O/Y	cda:maxDoseQuantity	
8.11	Product Form	O/N	cda:administrationUnitCode	2.2.1.9.7
8.12	Delivery Method	O/Y	cda:code	2.2.1.9.8
	MEDICATION INFORMATION	R/Y	cda:consumable/cda:manufacturedProduct	2.2.1.9.9 Constraints (7) w/Product Name Vocabulary
8.13	Coded Product Name	R2/Y	cda:manufacturedMaterial/ cda:code	
8.14	Coded Brand Name	R2/Y	cda:translation	
8.15	Free Text Product Name	R/N	cda:orginalText	
8.16	Free Text Brand Name	R2/N	cda:manufacturedMaterial/ cda:name	
8.17	Drug Manufacturer	O/N	cda:manufacturerOrganization	
8.18	Product Concentration	R2/N		Constraint: The product concentration is determined from the coded product or brand name using knowledge base information in the vocabularies specified for these fields, and therefore this information is not explicitly included in the registration and medication summary.
8.19	Type of Medication	R2/N	cda:entryRelationship[@typeCode='SUBJ']/ cda:observation[cda:templateId/@root= '2.16.840.1.113883.3.88.11.32.10']/ cda:value/@code	2.2.1.9.11 Constraints (5)

8.20	Status of Medication	R2/N	cda:entryRelationship[@typeCode='REFR']/ cda:observation[cda:templateId/@root= '2.16.840.1.113883.10.20.1.47']/ cda:value/@code	2.2.1.9.12
8.21	Indication	O/Y	cda:entryRelationship[@typeCode='RSON']/ cda:observation[cda:templateId/@root='2.16.840.1.113883.10.20.1.28']/ @code	2.2.1.9.13
8.22	Patient Instructions	O/N	cda:entryRelationship/cda:act[cda:templateId/@root= '2.16.840.1.113883.10.20.1.49']/ cda:text	2.2.1.9.14 Constraint: recorded as described in section 3.9.2.2.2 of the HL7 CCD
8.23	Reaction	O/N	cda:entryRelationship[@typeCode='CAUS']/ cda:observation[cda:templateId/@root= '2.16.840.1.113883.10.20.1.54']	The reaction observation follows the same pattern as in the Alerts section
8.24	Vehicle	O/Y	cda:participant/cda:participantRole[cda:code/@code = '412307009' and cda:code/@codeSystem= '2.16.840.1.113883.6.96']/cda:playingEntity/cda:code	2.2.1.9.15 Constraints (6). The codes are the same as for "Coded Product Name"
8.25	Dose Indicator	O/Y	cda:precondition/cda:criteria	
	ORDER INFORMATION	R2/Y	cda:entryRelationship[@typeCode='REFR']/ cda:supply[moodCode='INT']	2.2.1.9.16
8.26	Order Number	R2/N	cda:id	
8.27	Fills	O/N	cda:repeatNumber	2.2.1.9.17
8.28	Quantity Ordered	R2/N	cda:quantity	2.2.1.9.18 Constraint: If other than administration units (e.g., a volume of liquid or mass of substance) units shall be recorded using the Unified Code for Units of Measure.
8.29	Order Expiration Date/Time	R2/N	cda:effectivetime/cda:high	
8.30	Order Date/Time	O/N	cda:author/cda:time	

8.31	Ordering Provider	O/N	cda:author/cda:assignedEntity/ cda:assignedPerson/cda:name	
8.32	Fulfillment Instructions	O/N	cda:entryRelationship/ cda:act[cda:templateId/@root= '2.16.840.1.113883.10.20.1.43']/ cda:text	2.2.1.9.19
8.33	Fulfillment History	O/Y	cda:supply[@moodCode='EVN']	
8.34	Prescription Number	R2/N	cda:id	2.2.1.9.20
8.35	Provider	O/N	cda:performer/cda:assignedEnti ty	2.2.1.9.21
8.36	Location	O/N	cda:performer/cda:assignedEnti ty/ cda:addr	
8.37	Dispense Date	O/N	cda:effectiveTime	
8.38	Quantity Dispensed	R2/N	cda:quantity	2.2.1.9.22 Constraint: If other than administration units (e.g., a volume of liquid or mass of substance) units shall be recorded using the Unified Code for Units of Measure.
8.39	Fill number	R2/N	cda:entryRelationship[@typeCo de='COMP']/ cda:sequenceNum	2.2.1.9.23
8.40	Fill Status	O/N	cda:statusCode	2.2.1.9.24
Pregnancy Module				
9.01	Pregnancy	O/N	cda:observation/cda:code[@code='7 73860066' and @codeSystem='2.16.840.1.1138836. 96']/cda:value	C32 implies that this observation indicating pregnancy should be included in the problem section of the CCD (Section 3.5 of the CCD Impl. Guide).
Information Source Module				
	AUTHOR	R/N	ancestor-or-self::./cda:author[1]	
10.01	Author Time	R/N	cda:time	
10.02	Author Name	R/N	cda:assignedAuthor/cda:assignedPer son/cda:name	2.2.1.11.1
10.03	Reference	R2/Y	cda:reference/cda:externalDocument	
10.04	Reference Document ID	R/N	cda:id	
10.05	Reference Document URL	O/N	cda:text/cda:reference/@value	
	INFORMATION SOURCE	O/Y	ancestor-or-self::./cda:informant	

10.06	Information Source Name	R/N	cda:assignedPerson/cda:name	
Comment Module				
	COMMENT		cda:act[cda:templateId/@root = '2.16.840.1.113883.10.20.1.40']	
	AUTHOR		ancertor-or-self::./cda:author[1]	
11.01	Free Text Comment	R/N	cda:text/cda:reference/@value	2.2.1.12.1
Advance Directive Module				
	ADVANCE DIRECTIVE EVENT ENTRY		cda:observation[cda:templateId/@root= '2.16.840.1.113883.10.20.1.17']	
12.01	Advance Directive Type	R2/N	cda:code	2.2.1.13.1
12.02	Advance Directive Free Text Type	R/N	cda:orginalText/cda:reference/@value	2.2.1.13.2
12.03	Effective Date	R/N	cda:effectiveTime	2.2.1.13.3
12.04	Custodian of the Document	R/N	cda:participant[@typeCode='CST']/cda:participantRole[@classCode='AGNT']	2.2.1.13.4
missing	Advance Directive Status	R/N	cda:entryRelationship/cda:observation/cda:value/	
Immunization Module				
	IMMUNIZATION EVENT ENTRY		cda:substanceAdministration[cda:templateId/@root = '2.16.840.1.113883.10.20.1.24']	
13.01	Refusal	R/N	cda:negationInd	
13.02	Administered Date	O/N	cda:effectiveTime	
13.03	Medication Series Number	O/N	cda:entryRelationship[@typeCode='SUBJ']/cda:observation/cda:value	
13.04	Reaction	O/Y	cda:entryRelationship[@typeCode='CAUS']/cda:observation[cda:templateId/@root='2.16.840.1.11.3883.10.20.1.54']	The reaction observation follows the same pattern as in the Alerts section
13.05	Performer	O	cda:performer/cda:assignedEntity	

	MEDICATION INFORMATION	R/Y	cda:consumable/cda:manufacturedProduct	When a C32 Medication Information data element (2.16.840.1.113883.3.88.11.32.9) appears in a CCD Medications section (2.16.840.1.113883.10.20.1.8), then the code shall be coded using CVX. The code shall appear in the code attribute of the <code> or <translation> element. The OID for CVX is 2.16.840.1.113883.6.59
13.06	Coded Product Name	R2/Y	cda:manufacturedMaterial/cda:code	Code describing the product from a controlled vocabulary
13.07	Free Text Product Name	R/N	cda:originalText	
13.08	Drug Manufacturer	O/N	cda:manufacturerOrganization	
13.09	Lot Number	R2/N	cda:manufacturedMaterial/cda:lotNumberText	
13.10	Refusal Reason	R2/N	cda:entryRelationship[@typeCode='RSON']/cda:act[cda:templateId/@root='2.16.840.1.113883.10.20.1.27']/cda:code	
Vital Sign Module				
	RESULTS EVENT ENTRY	R/Y	cda:observation[cda:templateId/@root = '2.16.840.1.113883.10.20.1.14']	
14.01	Result ID	R/Y	cda:id	
14.02	Result Date/Time	R/N	cda:effectiveTime	
14.03	Result Type	R/N	cda:code	2.2.1.15
14.04	Result Status	R2/N	cda:statusCode	2.2.1.16.1
14.05	Result Value	R/N	cda:value	
14.06	Result Interpretation	O/N	cda:interpretationCode	
14.07	Result Reference Range	O/Y	cda:referenceRange	
Results Module				

	RESULTS EVENT ENTRY	R/Y	cda:observation[cda:templateId/@root = '2.16.840.1.113883.10.20.1.14']	
15.01	Result ID	R/Y	cda:id	
15.02	Result Date/Time	R/N	cda:effectiveTime	
15.03	Result Type	R/N	cda:code	2.2.1.16.2
15.04	Result Status	R2/N	cda:statusCode	2.2.1.16.1
15.05	Result Value	R/N	cda:value	In many cases, the "value" of a result is a numeric result, such as a blood cell count. But in many other cases, the result is a coded element, as in anatomic pathology or microbiology. In those cases, the value should be represented using a SNOMED CT concept code.
15.06	Result Interpretation	O/N	cda:interpretationCode	
15.07	Result Reference Range	O/Y	cda:referenceRange	
Encounter Module				
	ENCOUNTER EVENT ENTRY		cda:encounter[cda:templateId/@root = '2.16.840.1.113883.10.20.1.21']	
16.01	Encounter ID	R/Y	cda:id	
16.02	Encounter Type	R2/N	cda:code	2.2.1.17.1
16.03	Encounter Free Text Type	R/N	cda:originalText/cda:reference/@value	
16.04	Encounter Date/Time	R/N	cda:effectiveTime	
16.05	Encounter Provider	R2/Y	cda:participant/cda:assignedEntity	2.2.1.17.2
Procedure Module				
	PROCEDURES	O/N	cda:section[cda:templateId[@root = '2.16.840.1.113883.10.20.1.12']]	
17.01	Text	O/N	cda:text	
	PROCEDURE EVENT ENTRY	O/Y	cda:procedure[cda:templateId/@root='2.16.840.1.113883.10.20.1.29']	
17.03	Procedure ID	R/N		
17.04	Procedure Status Code	R/N	cda:procedure/cda:statusCode	

	Results Organizer		cda:organizer	The results organizer groups a number of results, and is usually analagous to the order
17.05	Organizer ID		cda:organizer/cda:id	likely the Order ID
17.06	Results Status		cda:organizer/cda:statusCode	
17.07	Results Organizer Code		cda:organizer/cda:code	
17.08	Encounter Location		cda:encounter/cda:participant/[@typeCode="LOC"]	
17.09	Encounter Location Code		cda:participant/cda:participantRole/cda:code	
	Data elements from XDS-LAB			
Level 1: Header of the laboratory report				
Document Unique Identifier				
1.01	ID	R/N	/cda:ClinicalDocument/cda:id root (OID) = 2.16.840.1.113883.19.4 extension - any text string, combination root + extension must be unique	
1.02	Code	R/N	/cda:ClinicalDocument/cda:code	
	Service Event	R/N	/cda:ClinicalDocument/cda:documentationOf/cda:serviceEvent	
1.03	Status Code	R/N	/cda:statusCode	
	Performer	R/N	/cda:ClinicalDocument/cda:documentationOf/cda:serviceEvent/performer	
1.04	Represented Organization	R/N	/cda:assignedEntity/cda:representedOrganization	
Language				
2.01	Language Code	R/N	/cda:ClinicalDocument/cda:languageCode	
Version				
3.01	Template Id	R/N	/cda:ClinicalDocument/cda:templateId root (OID) = 1.3.6.1.4.1.19376.1.3.3 extension "Lab.Report.Clinical.Document"	IHE Laboratory TF vol 3, 4.1.6
CCR Creation Date/Time				
4.01	Effective Time	R/N	/cda:ClinicalDocument/cda:effectiveTime Creation date and time of the laboratory report, in the case this is a new revision replacing and existing version, this is the date and time of	

			the new version.	
Patient				
	Record Target	R/N	/cda:ClinicalDocument/cda:recordTarget This field is the same as c32, it will require id, name, address, telecom as well as the other recordTarget/cda:patientRole fields.	
From				
	Author	R/N	/cda:ClinicalDocument/cda:author	
5.01	Time	R/N	/cda:ClincicalDocument/cda:author/cda:time	
	Assigned Author (if authored by a system)	R/N	/cda:ClinicalDocument/cda:author/cda:assignedAuthor	
5.02	Id	R/N	/cda:ClinicalDocument/cda:author/cda:assignedAuthor/cda:id	
5.03	Assigned Authoring Device	R/N	/cda:ClinicalDocument/cda:author/cda:assignedAuthor/cda:assignedAuthoringDevice	
	Assigned Author (if authored by a person)	R/N	/cda:ClinicalDocument/cda:author/cda:assignedAuthor	
5.04	ID	R/N	/cda:ClinicalDocument/cda:author/cda:assignedAuthor/cda:id	
5.05	Address	R/N	/cda:addr	
5.06	Telecommunication	R/Y	/cda:telecom	
	AUTHORING PHYSICIAN INFORMATION	R/N	/cda:ClinicalDocument/cda:author/cda:assignedAuthor/cda:assignedPerson	
5.07	Name	R/N	/cda:name	
	Represented Organization	R/N	/cda:ClinicalDocument/cda:author/cda:representedOrganization	
5.08	Name	R/N	/cda:name	
To				
	Intended Recipient	R/N	/cda:ClinicalDocument/cda:informationRecipient/cda:intendedRecipient	
6.01	ID	R/N	/cda:id	
	Information Recipient	R/N	/cda:ClinicalDocument/cda:informationRecipient/cda:intendedRecipient/cda:informationRecipient	
6.02	Name	R/N	/cda:name	

6.03	Address	R/N	/cda:ClinicalDocument/cda:informationRecipient/cda:intendedRecipient/cda:addr	
6.04	Telecommunication	R/N	/cda:ClinicalDocument/cda:informationRecipient/cda:intendedRecipient/cda:telecom	
IHE fields				
7.01	Realm Code	R/N	/cda:ClinicalDocument/cda:realmCode	must be set to "UV" (Universal)
7.02	Type Id	R/N	/cda:CinicalDocument/cda:typeId root (OID) = 2.16.840.1.113883.1.3 extension "POCD_HD000040"	
7.03	Confidentiality Code	R/N	/cda:ClinicalDocument/cda:confidentialityCode	
7.04	Set ID	R/N	/cda:ClincicalDocument/cda:setId An identifier that is common across all revisions.	
7.05	Version Number	R/N	/cda:ClinicalDocument/cda:versionNumber	
	Custodian of the Document	R/N	/cda:ClinicalDocument/cda:custodian /cda:assignedCustodian/cda:representedCustodianOrganization	
7.06	ID	R/N	/cda:id extension="1" root="1.3.6.4.1.4.1.2835.3"	
7.07	Name	R/N	/cda:name	
7.08	Address	R/N	/cda:addr	
7.09	Telecommunication	R/N	/cda:telecom	
	LegalAuthenticator	R/N	/cda:ClinicalDocument/cda:legalAuthenticator	
7.10	Time	R/N	/cda:time value="20050329224512+0500" (example)	
7.11	Signature Code	R/N	/cda:signatureCode/@code	must be set to "S" (signed)
	Assigned Entity	R/N	/cda:assignedEntity	
7.12	ID	R/N	/cda:id	
7.13	Address	R/N	/cda:addr	
7.14	Telecommunication	R/N	/cda:telecom	
	Assigned Person	R/N	/cda:assignedPerson	
7.15	Name	R/N	/cda:name	
	Authenticator	R/N	/cda:ClinicalDocument/cda:authenticator	
7.16	Time	R/N	/cda:time	

7.17	Signature Code	R/N	/cda:signatureCode code="S"	must be set to "S" (signed)
	Assigned Entity	R/N	/cda:ClinicalDocument/cda:assignedEntity	
7.18	ID	R/N	/cda:id	
7.19	Address	R/N	/cda:addr	
7.20	Telecommunication	R/N	/cda:telecom	
	Assigned Person	R/N	/cda:assignedPerson	
7.21	Name	R/N	/cda:name	
	Participant	R/N	/cda:ClinicalDocument/cda:participant typeCode="REF" (referer)	
7.22	Time	R/N	/cda:time	
	Associated Entity	R/N	/cda:ClinicalDocument/cda:participant/cda:associatedEntity	
7.23	ID	R/N	/cda:id	
7.24	Address	R/N	/cda:addr	
7.25	Telecommunication	R/N	/cda:telecom	
	Associated Entity	R/N	/cda:ClinicalDocument/cda:participant/cda:associatedEntity/cda:associatedPerson	
7.26	Name	R/N	/cda:name	
	Service Event	R/N	/cda:ClinicalDocument/cda:documentationOf/cda:serviceEvent	
7.27	Status Code	R/N	/cda:statusCode	
	Performer	R/N	/cda:ClinicalDocument/cda:documentationOf/cda:serviceEvent/performer	
7.28	Represented Organization	R/N	/cda:assignedEntity/cda:representedOrganization	
7.29	Parent Document	O/N	/cda:ClinicalDocument/cda:relatedDocument/cda:parentDocument Only present if there is an update to a previous document, in which case "relatedDocument.typeCode" will be "RPLC".	
	Consent	R/N	/cda:authorization/cda:consent classCode="CONS" moodCode="EVN"	
7.30	Code	R/N	/cda:code Code="XXXX" codeSystem="YYYY"	
7.31	Status Code	R/N	/cda:statusCode/@code	must be set to "completed"

	Encompassing Encounter	O/N	/cda:encompassingEncounter this field is optional so its analysis is not a current priority.	
Level 2: Human-readable Body				
Structured Body				
	Section		/cda:ClinicalDocument/cda:structuredBody/cda:section	
1.01	Code	R/N	/cda:ClinicalDocument/cda:structuredBody/cda:section/cda:code	
	Component		/cda:ClinicalDocument/cda:structuredBody/cda:section/cda:component	
	Section		/cda:ClinicalDocument/cda:structuredBody/cda:section/cda:component/cda:section	
1.02	Code	R/N	/cda:ClinicalDocument/cda:structuredBody/cda:section/cda:component/cda:section/cda:code	
1.03	Text	R/N	/cda:ClinicalDocument/cda:structuredBody/cda:section/cda:component/cda:section/cda:text human readable text block. Most examples include basic html formatting.	
Level 3: Machine-readable Body				
Report Entry				
1.01	entry	R/N	/cda:section/cda:entry typeCode="DRIV"	
1.02	Template Id	R/N	/cda:section/cda:entry/cda:templateId root="1.3.6.1.4.1.19376.1.3.1 extension="Lab.Report.Data.Processing.Entry"	
	Act		/cda:ClinicalDocument/cda:structuredBody/cda:section/cda:entry/cda:act classCode="ACT" moodCode="EVN"	
1.03	ID	R/N	/cda:section/cda:entry/cda:act/cda:id	
1.04	code	R/N	/cda:section/cda:entry/cda:act/cda:code	order code (LOINC orders)
1.05	Status Code	R/N	/cda:section/cda:entry/cda:act/cda:statusCode	

1.06	Effective Time	R/N	/cda:section/cda:entry/cda:act:/cda:effectiveTime value= date/time the content of the entry was issued	
1.07	Confidentiality Code	R/N	/cda:section/cda:entry/cda:act:/cda:confidentialityCode	
	Specimen		/cda:ClinicalDocument/cda:structuredBody/cda:section/cda:entry/cda:act/cda:specimen typeCode="SPC"	
	Specimen Role		/cda:section/cda:entry/cda:act:/cda:specimen/cda:specimenRole	
1.08	ID	R/N	/cda:section/cda:entry/cda:act:/cda:specimen/cda:specimenRole/cda:id	
	Specimen Playing Entity		/cda:section/cda:entry/cda:act/cda:specimen/cda:specimenRole/cda:specimenPlayingEntity	
1.09	code	R/N	/cda:section/cda:entry/cda:act/cda:specimen/cda:specimenRole/cda:specimenPlayingEntity/cda:code	
	Product Of		/cda:section/cda:entry/cda:act:/cda:specimen/cda:specimenRole/lab:productOf typeCode="PRD"	
	Procedure		/cda:section/cda:entry/cda:act:/cda:specimen/cda:specimenRole/lab:productOf/lab:procedure	
1.11	Effective Time	R/N	/cda:section/cda:entry/cda:act:/cda:specimen/cda:specimenRole/lab:productOf/lab:procedure/lab:effectiveTime date/time of specimen collection	
1.12	targetSiteCode	R/N	/cda:section/cda:entry/cda:act:/cda:specimen/cda:specimenRole/lab:productOf/lab:procedure/cda:targetSiteCode	
1.13	Performer	R/N	/cda:section/cda:entry/cda:act/cda:performer typeCode=PRF this section should appear the same as in previous instances of this document or c32.	
1.14	Author	R/N	/cda:section/cda:entry/cda:act/cda:author typeCode=ATH this section should appear the same in previous instances of this	

			document or c32.	
1.15	Participant	R/N	/cda:section/cda:entry/cda:act/cda:participant/@typeCode	
1.16	Entry Relationship	R/N	/cda:section/cda:entry/cda:act/cda:entryRelationship typeCode="COMP" this entry can contain multiple of the following elements: Observation Report, cda:act object, classcode="ACT" Observation Battery, cda:organizer, classcode="BATTERY" Specimen Obs Cluster, cda:organizer, classcode="CLUSTER" ObservationEvent, cda:observation, classcode="OBS" Annotation, cda:act, classcode="ACT" Process, cda:procedure, classcode="PROC"	
Observation Report				
Specimen Observation Cluster				
	Organizer		/cda:entryRelationship/cda:organizer classCode="CLUSTER"	
1.01	ID	R/N	/cda:entryRelationship/cda:organizer/cda:id	
1.02	Code	R/N	/cda:entryRelationship/cda:organizer/cda:code	
1.03	Status Code	R/N	/cda:entryRelationship/cda:organizer/cda:statusCode	
1.04	Time	R/N	/cda:entryRelationship/cda:organizer/cda:effectiveTime value	
	Specimen		/cda:entryRelationship/cda:organizer/cda:specimen typeCode="SPC" This entry appears the same as analyzed previously in this document. With the exception of the specimenRole below.	
1.05	Specimen Role	R/N	/cda:entryRelationship/cda:organizer/cda:specimenRole classCode=ISLT	

1.06	ID	R/N	/cda:entryRelationship/cda:organizer /cda:specimenRole/cda:id	
1.07	Specimen Playing Entity	R/N	/cda:entryRelationship/cda:organizer /cda:specimenRole/cda:specimenPlayingEntity classCode=MIC	
1.08	Code	R/N	/cda:entryRelationship/cda:organizer /cda:specimenRole/cda:specimenPlayingEntity/cda:code	
1.09	Performer	R/N	/cda:entryRelationship/cda:organizer /cda:performer	
1.1	Author	R/N	/cda:entryRelationship/cda:organizer /cda:author	
1.11	Participant	R/N	/cda:entryRelationship/cda:organizer /cda:participant	
1.12	Component	R/Y	/cda:entryRelationship/cda:organizer /cda:component	
	Organizer (Battery_Organizer)		/cda:entryRelationship/cda:organizer /cda:component/cda:organizer classCode="BATTERY" moodCode="EVN"	
1.13	ID	R/N	/cda:organizer/cda:id	
1.14	code	R/N	/cda:organizer/cda:code	
1.15	Status Code	R/N	/cda:organizer/cda:statusCode	
1.16	Effective Time	R/N	/cda:organizer/cda:effectiveTime value - time results on this battery	
	Specimen		/cda:organizer/cda:specimen typeCode="SPC" This element is to appear the same as previously analyzed in this document.	
	Performer		/cda:organizer/cda:performer typeCode="PRF" This element is to appear the same as previously analyzed in this document.	
	Author		/cda:organizer/cda:performer typeCode="AUT" This element is to appear the same as previously analyzed in this document.	
1.17	Participant	R/N	/cda:act/cda:participant/@typeCode	

1.18	Content of battery_organizer	R/N	/cda:organizer/cda:component typeCode="COMP"	
	Observation	R/Y	/cda:organizer/cda:component/cda:observation classCode="OBS" moodCode="EVN"	
1.19	ID	O/N	/cda:organizer/cda:component/cda:observation/cda:id	
1.2	code	R/N	/cda:organizer/cda:component/cda:observation/cda:code	
1.21	Status Code	R/N	/cda:organizer/cda:component/cda:observation/cda:statusCode	
1.22	Effective Time	O/N	/cda:organizer/cda:component/cda:observation/cda:effectiveTime value	
1.23	Value	O/N	/cda:organizer/cda:component/cda:observation/cda:value	the result obtained for this test using the appropriate data type. Numeric results use data type PQ.
1.24	interpretationCode	O/N	/cda:organizer/cda:component/cda:observation/cda:interpretationCode	
1.25	Method Code	O/N	/cda:organizer/cda:component/cda:observation/cda:methodCode	
	Specimen	R/N	/cda:organizer/cda:component/cda:observation/cda:specimen typeCode="SPC" This element is to appear the same as previously analyzed in this document.	
	Performer	R/N	/cda:organizer/cda:component/cda:observation/cda:performer typeCode="PRF" This element is to appear the same as previously analyzed in this document.	
	Author	R/N	/cda:organizer/cda:component/cda:observation/cda:author typeCode="AUT" This element is to appear the same as previously analyzed in this document.	
	Participant	R/N	/cda:act/cda:participant	

	Entry Relationship	R/N	/cda:observation/cda:entryRelationship typeCode="COMP"	
	Act	R/N	/cda:observation/cda:entryRelationship/cda:act classCode="ACT" moodCode="EVN"	
1.26	Text	R/N	/cda:observation/cda:entry/Relationship/cda:act/cda:text	
1.27	Entry Relationship (for previously obtained observations for the same patient, test, same method, same unit)	R/N	/cda:observation/cda:entryRelationship typeCode="REFR"	
	Observation	R/N	/cda:observation/cda:entryRelationship/cda:observation classCode="OBS" moodCode="EVN"	
1.28	Code	R/N	/cda:observation/cda:entryRelationship/cda:observation/cda:code	
1.29	Status Code	R/N	/cda:observation/cda:entryRelationship/cda:observation/cda:statusCode code="completed"	
1.3	Effective Time	R/N	/cda:observation/cda:entryRelationship/cda:observation/cda:effectiveTime value=clinically relevant date/time of the previous result	
1.31	Value	R/N	/cda:observation/cda:entryRelationship/cda:observation/cda:value previous result obtained from this test.	
	Reference Range		/cda:observation/cda:referenceRange typeCode=REFV	
	Observation Range		/cda:observation/cda:referenceRange/cda:observationRange classCode="OBS" moodCode="EVN.CRT"	
1.32	Value	R/N	/cda:observation/cda:referenceRange/cda:observationRange/cda:value	
1.33	Interpretation Code	R/N	/cda:observation/cda:referenceRange/cda:observationRange/cda:interpretationCode/@code	must be set to "N" (normal)

1.34	Pre Condititition	R/N	/cda:observation/cda:referenceRange/cda:observationRange/cda:precondition	
1.35	Criterion	R/N	/cda:observation/cda:referenceRange/cda:observationRange/cda:precondition/cda:criterion classCode="COND" moodCode="EVN"	
1.36	Code	R/N	/cda:observation/cda:referenceRange/cda:observationRange/cda:precondition/cda:criterion/cda:code code - code of the criterion (ie age, sex)	LOINC
1.37	Value	R/N	/cda:observation/cda:referenceRange/cda:observationRange/cda:precondition/cda:criterion/cda:value Value of the criterion	SNOMED CT or numeric

Administrative Gender

Value Set Name:	AdministrativeGender
Value Set OID:	2.16.840.1.113883.1.11.1
Value Set Author:	HL7
Value Set Version:	20080101
Base Code Set(s):	HL7 Administrative Gender Codes

Code	CodeSet OID	Description
F	2.16.840.1.113883.5.1	Female
M	2.16.840.1.113883.5.1	Male
UN	2.16.840.1.113883.5.1	Undifferentiated

Marital Status

Value Set Name:	MaritalStatus
Value Set OID:	2.16.840.1.113883.1.11.12212
Value Set Author:	HL7
Value Set Version:	20080101
Base Code Set(s):	HL7 MaritalStatus code set

Code	CodeSet OID	Description
A	2.16.840.1.113883.5.2	Annulled
D	2.16.840.1.113883.5.2	Divorced

T	2.16.840.1.113883.5.2	Domestic Partner
I	2.16.840.1.113883.5.2	Interlocutory
L	2.16.840.1.113883.5.2	Legally Separated
M	2.16.840.1.113883.5.2	Married
S	2.16.840.1.113883.5.2	Never Married
P	2.16.840.1.113883.5.2	Polygamous
W	2.16.840.1.113883.5.2	Widowed

Religious Affliction

Value Set Name:	ReligiousAffiliation
Value Set OID:	2.16.840.1.113883.1.11.19185
Value Set Author:	HL7
Value Set Version:	20080101
Base Code Set(s):	HL7 ReligiousAffiliation code set

Code	CodeSet OID	Description
1001	2.16.840.1.113883.5.1076	Adventist
1002	2.16.840.1.113883.5.1076	African Religions
1003	2.16.840.1.113883.5.1076	Afro-Caribbean Religions
1004	2.16.840.1.113883.5.1076	Agnosticism
1005	2.16.840.1.113883.5.1076	Anglican
1006	2.16.840.1.113883.5.1076	Animism
1061	2.16.840.1.113883.5.1076	Assembly of God
1007	2.16.840.1.113883.5.1076	Atheism
1008	2.16.840.1.113883.5.1076	Babi & Baha'I faiths
1009	2.16.840.1.113883.5.1076	Baptist
1010	2.16.840.1.113883.5.1076	Bon
1062	2.16.840.1.113883.5.1076	Brethren
1011	2.16.840.1.113883.5.1076	Cao Dai
1012	2.16.840.1.113883.5.1076	Celticism
1013	2.16.840.1.113883.5.1076	Christian (non-Catholic, non-specific)
1063	2.16.840.1.113883.5.1076	Christian Scientist
1064	2.16.840.1.113883.5.1076	Church of Christ
1065	2.16.840.1.113883.5.1076	Church of God
1014	2.16.840.1.113883.5.1076	Confucianism
1066	2.16.840.1.113883.5.1076	Congregational
1015	2.16.840.1.113883.5.1076	Cyberculture Religions
1067	2.16.840.1.113883.5.1076	Disciples of Christ
1016	2.16.840.1.113883.5.1076	Divination
1068	2.16.840.1.113883.5.1076	Eastern Orthodox

1069	2.16.840.1.113883.5.1076	Episcopalian
1070	2.16.840.1.113883.5.1076	Evangelical Covenant
1017	2.16.840.1.113883.5.1076	Fourth Way
1018	2.16.840.1.113883.5.1076	Free Daism
1071	2.16.840.1.113883.5.1076	Friends
1072	2.16.840.1.113883.5.1076	Full Gospel
1019	2.16.840.1.113883.5.1076	Gnosis
1020	2.16.840.1.113883.5.1076	Hinduism
1021	2.16.840.1.113883.5.1076	Humanism
1022	2.16.840.1.113883.5.1076	Independent
1023	2.16.840.1.113883.5.1076	Islam
1024	2.16.840.1.113883.5.1076	Jainism
1025	2.16.840.1.113883.5.1076	Jehovah's Witnesses
1026	2.16.840.1.113883.5.1076	Judaism
1027	2.16.840.1.113883.5.1076	Latter Day Saints
1028	2.16.840.1.113883.5.1076	Lutheran
1029	2.16.840.1.113883.5.1076	Mahayana
1030	2.16.840.1.113883.5.1076	Meditation
1031	2.16.840.1.113883.5.1076	Messianic Judaism
1073	2.16.840.1.113883.5.1076	Methodist
1032	2.16.840.1.113883.5.1076	Mitraism
1074	2.16.840.1.113883.5.1076	Native American
1075	2.16.840.1.113883.5.1076	Nazarene
1033	2.16.840.1.113883.5.1076	New Age
1035	2.16.840.1.113883.5.1076	Occult
1036	2.16.840.1.113883.5.1076	Orthodox
1037	2.16.840.1.113883.5.1076	Paganism
1038	2.16.840.1.113883.5.1076	Pentecostal
1076	2.16.840.1.113883.5.1076	Presbyterian
1039	2.16.840.1.113883.5.1076	Process, The
1077	2.16.840.1.113883.5.1076	Protestant
1078	2.16.840.1.113883.5.1076	Protestant, No Denomination
1079	2.16.840.1.113883.5.1076	Reformed
1040	2.16.840.1.113883.5.1076	Reformed/Presbyterian
1041	2.16.840.1.113883.5.1076	Roman Catholic Church
1080	2.16.840.1.113883.5.1076	Salvation Army
1042	2.16.840.1.113883.5.1076	Satanism
1043	2.16.840.1.113883.5.1076	Scientology
1044	2.16.840.1.113883.5.1076	Shamanism
1045	2.16.840.1.113883.5.1076	Shiite (Islam)
1046	2.16.840.1.113883.5.1076	Shinto
1047	2.16.840.1.113883.5.1076	Sikism
1048	2.16.840.1.113883.5.1076	Spiritualism

1049	2.16.840.1.113883.5.1076	Sunni (Islam)
1050	2.16.840.1.113883.5.1076	Taoism
1051	2.16.840.1.113883.5.1076	Theravada
1081	2.16.840.1.113883.5.1076	Unitarian Universalist
1052	2.16.840.1.113883.5.1076	Unitarian-Universalism
1082	2.16.840.1.113883.5.1076	United Church of Christ
1053	2.16.840.1.113883.5.1076	Universal Life Church
1054	2.16.840.1.113883.5.1076	Vajrayana (Tibetan)
1055	2.16.840.1.113883.5.1076	Veda
1056	2.16.840.1.113883.5.1076	Voodoo
1057	2.16.840.1.113883.5.1076	Wicca
1058	2.16.840.1.113883.5.1076	Yaohushua
1059	2.16.840.1.113883.5.1076	Zen Buddhism
1060	2.16.840.1.113883.5.1076	Zoroastrianism
1034	2.16.840.1.113883.5.1076	non-Roman Catholic

Race

Value Set Name:	Race
Value Set OID:	2.16.840.1.113883.1.11.14914
Value Set Author:	HL7
Value Set Version:	20080101
Base Code Set(s):	CDC Race and Ethnicity Codes

Code	CodeSet OID	Description
2131-1	2.16.840.1.113883.6.238	Other Race
2028-9	2.16.840.1.113883.6.238	Asian
2029-7	2.16.840.1.113883.6.238	Asian Indian
2030-5	2.16.840.1.113883.6.238	Bangladeshi
2031-3	2.16.840.1.113883.6.238	Bhutanese
2032-1	2.16.840.1.113883.6.238	Burmese
2033-9	2.16.840.1.113883.6.238	Cambodian
2034-7	2.16.840.1.113883.6.238	Chinese
2036-2	2.16.840.1.113883.6.238	Filipino
2037-0	2.16.840.1.113883.6.238	Hmong
2038-8	2.16.840.1.113883.6.238	Indonesian
2048-7	2.16.840.1.113883.6.238	Iwo Jiman
2039-6	2.16.840.1.113883.6.238	Japanese
2040-4	2.16.840.1.113883.6.238	Korean
2041-2	2.16.840.1.113883.6.238	Laotian
2052-9	2.16.840.1.113883.6.238	Madagascar

2042-0	2.16.840.1.113883.6.238	Malaysian
2049-5	2.16.840.1.113883.6.238	Maldivian
2050-3	2.16.840.1.113883.6.238	Nepalese
2043-8	2.16.840.1.113883.6.238	Okinawan
2044-6	2.16.840.1.113883.6.238	Pakistani
2051-1	2.16.840.1.113883.6.238	Singaporean
2045-3	2.16.840.1.113883.6.238	Sri Lankan
2035-4	2.16.840.1.113883.6.238	Taiwanese
2046-1	2.16.840.1.113883.6.238	Thai
2047-9	2.16.840.1.113883.6.238	Vietnamese
2054-5	2.16.840.1.113883.6.238	Black or African American
2058-6	2.16.840.1.113883.6.238	African American
2067-7	2.16.840.1.113883.6.238	Bahamian
2068-5	2.16.840.1.113883.6.238	Barbadian
2056-0	2.16.840.1.113883.6.238	Black
2070-1	2.16.840.1.113883.6.238	Dominica Islander
2069-3	2.16.840.1.113883.6.238	Dominican
2071-9	2.16.840.1.113883.6.238	Haitian
2072-7	2.16.840.1.113883.6.238	Jamaican
2060-2	2.16.840.1.113883.6.238	African
2061-0	2.16.840.1.113883.6.238	Botswanan
2062-8	2.16.840.1.113883.6.238	Ethiopian
2063-6	2.16.840.1.113883.6.238	Liberian
2064-4	2.16.840.1.113883.6.238	Namibian
2065-1	2.16.840.1.113883.6.238	Nigerian
2066-9	2.16.840.1.113883.6.238	Zairean
2073-5	2.16.840.1.113883.6.238	Tobagoan
2074-3	2.16.840.1.113883.6.238	Trinidadian
2075-0	2.16.840.1.113883.6.238	West Indian
2076-8	2.16.840.1.113883.6.238	Native Hawaiian or Other Pacific Islander
2500-7	2.16.840.1.113883.6.238	Other Pacific Islander
2100-6	2.16.840.1.113883.6.238	Melanesian
2101-4	2.16.840.1.113883.6.238	Fijian
2104-8	2.16.840.1.113883.6.238	New Hebrides
2102-2	2.16.840.1.113883.6.238	Papua New Guinean
2103-0	2.16.840.1.113883.6.238	Solomon Islander
2085-9	2.16.840.1.113883.6.238	Micronesian
2092-5	2.16.840.1.113883.6.238	Carolinian
2088-3	2.16.840.1.113883.6.238	Chamorro
2097-4	2.16.840.1.113883.6.238	Chuukese
2087-5	2.16.840.1.113883.6.238	Guamanian
2086-7	2.16.840.1.113883.6.238	Guamanian or Chamorro
2096-6	2.16.840.1.113883.6.238	Kiribati

2093-3	2.16.840.1.113883.6.238	Kosraean
2089-1	2.16.840.1.113883.6.238	Mariana Islander
2090-9	2.16.840.1.113883.6.238	Marshallese
2091-7	2.16.840.1.113883.6.238	Palauan
2094-1	2.16.840.1.113883.6.238	Pohnpeian
2095-8	2.16.840.1.113883.6.238	Saipanese
2098-2	2.16.840.1.113883.6.238	Yapese
2078-4	2.16.840.1.113883.6.238	Polynesian
2079-2	2.16.840.1.113883.6.238	Native Hawaiian
2080-0	2.16.840.1.113883.6.238	Samoan
2081-8	2.16.840.1.113883.6.238	Tahitian
2083-4	2.16.840.1.113883.6.238	Tokelauan
2082-6	2.16.840.1.113883.6.238	Tongan
1002-5	2.16.840.1.113883.6.238	American Indian or Alaska Native
1735-0	2.16.840.1.113883.6.238	Alaska Native
1737-6	2.16.840.1.113883.6.238	Alaska Indian
1739-2	2.16.840.1.113883.6.238	Alaskan Athabascan
1740-0	2.16.840.1.113883.6.238	Ahtna
1811-9	2.16.840.1.113883.6.238	Southeast Alaska
1813-5	2.16.840.1.113883.6.238	Tlingit-Haida
1814-3	2.16.840.1.113883.6.238	Angoon
1815-0	2.16.840.1.113883.6.238	Central Council of Tlingit and Haida Tribes
1816-8	2.16.840.1.113883.6.238	Chilkat
1817-6	2.16.840.1.113883.6.238	Chilkoot
1818-4	2.16.840.1.113883.6.238	Craig
1819-2	2.16.840.1.113883.6.238	Douglas
1820-0	2.16.840.1.113883.6.238	Haida
1821-8	2.16.840.1.113883.6.238	Hoonah
1822-6	2.16.840.1.113883.6.238	Hydaburg
1823-4	2.16.840.1.113883.6.238	Kake
1824-2	2.16.840.1.113883.6.238	Kasaan
1825-9	2.16.840.1.113883.6.238	Kenaitze
1826-7	2.16.840.1.113883.6.238	Ketchikan
1827-5	2.16.840.1.113883.6.238	Klawock
1828-3	2.16.840.1.113883.6.238	Pelican
1829-1	2.16.840.1.113883.6.238	Petersburg
1830-9	2.16.840.1.113883.6.238	Saxman
1831-7	2.16.840.1.113883.6.238	Sitka
1832-5	2.16.840.1.113883.6.238	Tenakee Springs
1833-3	2.16.840.1.113883.6.238	Tlingit
1834-1	2.16.840.1.113883.6.238	Wrangell
1835-8	2.16.840.1.113883.6.238	Yakutat
1837-4	2.16.840.1.113883.6.238	Tsimshian

1838-2	2.16.840.1.113883.6.238	Metlakatla
1966-1	2.16.840.1.113883.6.238	Aleut
1990-1	2.16.840.1.113883.6.238	Eyak
1968-7	2.16.840.1.113883.6.238	Alutiiq Aleut
1969-5	2.16.840.1.113883.6.238	Tatitlek
1970-3	2.16.840.1.113883.6.238	Ugashik
1972-9	2.16.840.1.113883.6.238	Bristol Bay Aleut
1973-7	2.16.840.1.113883.6.238	Chignik
1974-5	2.16.840.1.113883.6.238	Chignik Lake
1975-2	2.16.840.1.113883.6.238	Egegik
1976-0	2.16.840.1.113883.6.238	Igiugig
1977-8	2.16.840.1.113883.6.238	Ivanof Bay
1978-6	2.16.840.1.113883.6.238	King Salmon
1979-4	2.16.840.1.113883.6.238	Kokhanok
1980-2	2.16.840.1.113883.6.238	Perryville
1981-0	2.16.840.1.113883.6.238	Pilot Point
1982-8	2.16.840.1.113883.6.238	Port Heiden
1984-4	2.16.840.1.113883.6.238	Chugach Aleut
1985-1	2.16.840.1.113883.6.238	Chenega
1986-9	2.16.840.1.113883.6.238	Chugach Corporation
1987-7	2.16.840.1.113883.6.238	English Bay
1988-5	2.16.840.1.113883.6.238	Port Graham
1992-7	2.16.840.1.113883.6.238	Koniag Aleut
1994-3	2.16.840.1.113883.6.238	Agdaagux
1993-5	2.16.840.1.113883.6.238	Akhiok
1995-0	2.16.840.1.113883.6.238	Karluk
1996-8	2.16.840.1.113883.6.238	Kodiak
1997-6	2.16.840.1.113883.6.238	Larsen Bay
1998-4	2.16.840.1.113883.6.238	Old Harbor
1999-2	2.16.840.1.113883.6.238	Ouzinkie
2000-8	2.16.840.1.113883.6.238	Port Lions
2006-5	2.16.840.1.113883.6.238	Unangan Aleut
2007-3	2.16.840.1.113883.6.238	Akutan
2008-1	2.16.840.1.113883.6.238	Aleut Corporation
2009-9	2.16.840.1.113883.6.238	Aleutian
2010-7	2.16.840.1.113883.6.238	Aleutian Islander
2011-5	2.16.840.1.113883.6.238	Atka
2012-3	2.16.840.1.113883.6.238	Belkofski
2013-1	2.16.840.1.113883.6.238	Chignik Lagoon
2015-6	2.16.840.1.113883.6.238	False Pass
2014-9	2.16.840.1.113883.6.238	King Cove
2016-4	2.16.840.1.113883.6.238	Nelson Lagoon
2017-2	2.16.840.1.113883.6.238	Nikolski

2018-0	2.16.840.1.113883.6.238	Pauloff Harbor
2019-8	2.16.840.1.113883.6.238	Qagan Toyagungin
2020-6	2.16.840.1.113883.6.238	Qawalangin
2023-0	2.16.840.1.113883.6.238	Sand Point
2024-8	2.16.840.1.113883.6.238	South Naknek
2021-4	2.16.840.1.113883.6.238	St. George
2022-2	2.16.840.1.113883.6.238	St. Paul
2025-5	2.16.840.1.113883.6.238	Unalaska
2026-3	2.16.840.1.113883.6.238	Unga
2002-4	2.16.840.1.113883.6.238	Sugpiaq
2004-0	2.16.840.1.113883.6.238	Suqpigaq
1840-8	2.16.840.1.113883.6.238	Eskimo
1842-4	2.16.840.1.113883.6.238	Greenland Eskimo
1844-0	2.16.840.1.113883.6.238	Inupiat Eskimo
1845-7	2.16.840.1.113883.6.238	Ambler
1846-5	2.16.840.1.113883.6.238	Anaktuvuk
1847-3	2.16.840.1.113883.6.238	Anaktuvuk Pass
1849-9	2.16.840.1.113883.6.238	Arctic Slope Corporation
1848-1	2.16.840.1.113883.6.238	Arctic Slope Inupiat
1850-7	2.16.840.1.113883.6.238	Atqasuk
1851-5	2.16.840.1.113883.6.238	Barrow
1852-3	2.16.840.1.113883.6.238	Bering Straits Inupiat
1853-1	2.16.840.1.113883.6.238	Brevig Mission
1854-9	2.16.840.1.113883.6.238	Buckland
1855-6	2.16.840.1.113883.6.238	Chinik
1856-4	2.16.840.1.113883.6.238	Council
1857-2	2.16.840.1.113883.6.238	Deering
1858-0	2.16.840.1.113883.6.238	Elim
1859-8	2.16.840.1.113883.6.238	Golovin
1860-6	2.16.840.1.113883.6.238	Inalik Diomede
1861-4	2.16.840.1.113883.6.238	Inupiaq
1862-2	2.16.840.1.113883.6.238	Kaktovik
1863-0	2.16.840.1.113883.6.238	Kawerak
1864-8	2.16.840.1.113883.6.238	Kiana
1865-5	2.16.840.1.113883.6.238	Kivalina
1866-3	2.16.840.1.113883.6.238	Kobuk
1867-1	2.16.840.1.113883.6.238	Kotzebue
1868-9	2.16.840.1.113883.6.238	Koyuk
1869-7	2.16.840.1.113883.6.238	Kwiguk
1889-5	2.16.840.1.113883.6.238	Mary's Igloo
1870-5	2.16.840.1.113883.6.238	Mauneluk Inupiat
1871-3	2.16.840.1.113883.6.238	Nana Inupiat
1872-1	2.16.840.1.113883.6.238	Noatak

1873-9	2.16.840.1.113883.6.238	Nome
1874-7	2.16.840.1.113883.6.238	Noorvik
1875-4	2.16.840.1.113883.6.238	Nuiqsut
1876-2	2.16.840.1.113883.6.238	Point Hope
1877-0	2.16.840.1.113883.6.238	Point Lay
1878-8	2.16.840.1.113883.6.238	Selawik
1879-6	2.16.840.1.113883.6.238	Shaktoolik
1880-4	2.16.840.1.113883.6.238	Shishmaref
1881-2	2.16.840.1.113883.6.238	Shungnak
1882-0	2.16.840.1.113883.6.238	Solomon
1883-8	2.16.840.1.113883.6.238	Teller
1884-6	2.16.840.1.113883.6.238	Unalakleet
1885-3	2.16.840.1.113883.6.238	Wainwright
1886-1	2.16.840.1.113883.6.238	Wales
1887-9	2.16.840.1.113883.6.238	White Mountain
1888-7	2.16.840.1.113883.6.238	White Mountain Inupiat
1891-1	2.16.840.1.113883.6.238	Siberian Eskimo
1892-9	2.16.840.1.113883.6.238	Gambell
1893-7	2.16.840.1.113883.6.238	Savoonga
1894-5	2.16.840.1.113883.6.238	Siberian Yupik
1896-0	2.16.840.1.113883.6.238	Yupik Eskimo
1897-8	2.16.840.1.113883.6.238	Akiachak
1898-6	2.16.840.1.113883.6.238	Akiak
1899-4	2.16.840.1.113883.6.238	Alakanuk
1900-0	2.16.840.1.113883.6.238	Aleknagik
1901-8	2.16.840.1.113883.6.238	Andreafsky
1902-6	2.16.840.1.113883.6.238	Aniak
1903-4	2.16.840.1.113883.6.238	Atmautluak
1904-2	2.16.840.1.113883.6.238	Bethel
1905-9	2.16.840.1.113883.6.238	Bill Moore's Slough
1906-7	2.16.840.1.113883.6.238	Bristol Bay Yupik
1907-5	2.16.840.1.113883.6.238	Calista Yupik
1908-3	2.16.840.1.113883.6.238	Chefornak
1909-1	2.16.840.1.113883.6.238	Chevak
1910-9	2.16.840.1.113883.6.238	Chuathbaluk
1911-7	2.16.840.1.113883.6.238	Clark's Point
1912-5	2.16.840.1.113883.6.238	Crooked Creek
1913-3	2.16.840.1.113883.6.238	Dillingham
1914-1	2.16.840.1.113883.6.238	Eek
1915-8	2.16.840.1.113883.6.238	Ekuk
1916-6	2.16.840.1.113883.6.238	Ekwok
1917-4	2.16.840.1.113883.6.238	Emmonak
1962-0	2.16.840.1.113883.6.238	Georgetown

1918-2	2.16.840.1.113883.6.238	Goodnews Bay
1919-0	2.16.840.1.113883.6.238	Hooper Bay
1920-8	2.16.840.1.113883.6.238	Iqurmuit (Russian Mission)
1921-6	2.16.840.1.113883.6.238	Kalskag
1922-4	2.16.840.1.113883.6.238	Kasigluk
1923-2	2.16.840.1.113883.6.238	Kipnuk
1924-0	2.16.840.1.113883.6.238	Koliganek
1925-7	2.16.840.1.113883.6.238	Kongiganak
1926-5	2.16.840.1.113883.6.238	Kotlik
1927-3	2.16.840.1.113883.6.238	Kwethluk
1928-1	2.16.840.1.113883.6.238	Kwigillingok
1929-9	2.16.840.1.113883.6.238	Levelock
1930-7	2.16.840.1.113883.6.238	Lower Kalskag
1931-5	2.16.840.1.113883.6.238	Manokotak
1932-3	2.16.840.1.113883.6.238	Marshall
1933-1	2.16.840.1.113883.6.238	Mekoryuk
1934-9	2.16.840.1.113883.6.238	Mountain Village
1935-6	2.16.840.1.113883.6.238	Naknek
1937-2	2.16.840.1.113883.6.238	Napakiak
1938-0	2.16.840.1.113883.6.238	Napaskiak
1936-4	2.16.840.1.113883.6.238	Napaumute
1940-6	2.16.840.1.113883.6.238	New Stuyahok
1939-8	2.16.840.1.113883.6.238	Newhalen
1941-4	2.16.840.1.113883.6.238	Newtok
1942-2	2.16.840.1.113883.6.238	Nightmute
1943-0	2.16.840.1.113883.6.238	Nunapitchukv
1944-8	2.16.840.1.113883.6.238	Oscarville
1945-5	2.16.840.1.113883.6.238	Pilot Station
1946-3	2.16.840.1.113883.6.238	Pitkas Point
1947-1	2.16.840.1.113883.6.238	Platinum
1948-9	2.16.840.1.113883.6.238	Portage Creek
1949-7	2.16.840.1.113883.6.238	Quinhagak
1950-5	2.16.840.1.113883.6.238	Red Devil
1952-1	2.16.840.1.113883.6.238	Scammon Bay
1953-9	2.16.840.1.113883.6.238	Sheldon's Point
1954-7	2.16.840.1.113883.6.238	Sleetmute
1963-8	2.16.840.1.113883.6.238	St. Mary's
1951-3	2.16.840.1.113883.6.238	St. Michael
1955-4	2.16.840.1.113883.6.238	Stebbins
1956-2	2.16.840.1.113883.6.238	Togiak
1957-0	2.16.840.1.113883.6.238	Toksook
1958-8	2.16.840.1.113883.6.238	Tulukskak
1959-6	2.16.840.1.113883.6.238	Tuntutuliak

1960-4	2.16.840.1.113883.6.238	Tununak
1961-2	2.16.840.1.113883.6.238	Twin Hills
1964-6	2.16.840.1.113883.6.238	Umkumiate
1004-1	2.16.840.1.113883.6.238	American Indian
1006-6	2.16.840.1.113883.6.238	Abenaki
1008-2	2.16.840.1.113883.6.238	Algonquian
1026-4	2.16.840.1.113883.6.238	Arikara
1028-0	2.16.840.1.113883.6.238	Assiniboine
1033-0	2.16.840.1.113883.6.238	Bannock
1035-5	2.16.840.1.113883.6.238	Blackfeet
1037-1	2.16.840.1.113883.6.238	Brotherton
1039-7	2.16.840.1.113883.6.238	Burt Lake Band
1076-9	2.16.840.1.113883.6.238	Catawba
1744-2	2.16.840.1.113883.6.238	Alanvik
1741-8	2.16.840.1.113883.6.238	Alatna
1742-6	2.16.840.1.113883.6.238	Alexander
1743-4	2.16.840.1.113883.6.238	Allakaket
1745-9	2.16.840.1.113883.6.238	Anvik
1746-7	2.16.840.1.113883.6.238	Arctic
1747-5	2.16.840.1.113883.6.238	Beaver
1748-3	2.16.840.1.113883.6.238	Birch Creek
1749-1	2.16.840.1.113883.6.238	Cantwell
1750-9	2.16.840.1.113883.6.238	Chalkyitsik
1751-7	2.16.840.1.113883.6.238	Chickaloon
1752-5	2.16.840.1.113883.6.238	Chistochina
1753-3	2.16.840.1.113883.6.238	Chitina
1754-1	2.16.840.1.113883.6.238	Circle
1755-8	2.16.840.1.113883.6.238	Cook Inlet
1756-6	2.16.840.1.113883.6.238	Copper Center
1757-4	2.16.840.1.113883.6.238	Copper River
1758-2	2.16.840.1.113883.6.238	Dot Lake
1759-0	2.16.840.1.113883.6.238	Doyon
1760-8	2.16.840.1.113883.6.238	Eagle
1761-6	2.16.840.1.113883.6.238	Eklutna
1762-4	2.16.840.1.113883.6.238	Evansville
1763-2	2.16.840.1.113883.6.238	Fort Yukon
1764-0	2.16.840.1.113883.6.238	Gakona
1765-7	2.16.840.1.113883.6.238	Galena
1766-5	2.16.840.1.113883.6.238	Grayling
1767-3	2.16.840.1.113883.6.238	Gulkana
1768-1	2.16.840.1.113883.6.238	Healy Lake
1769-9	2.16.840.1.113883.6.238	Holy Cross
1770-7	2.16.840.1.113883.6.238	Hughes

1771-5	2.16.840.1.113883.6.238	Huslia
1772-3	2.16.840.1.113883.6.238	Iliamna
1773-1	2.16.840.1.113883.6.238	Kaltag
1774-9	2.16.840.1.113883.6.238	Kluti Kaah
1775-6	2.16.840.1.113883.6.238	Knik
1776-4	2.16.840.1.113883.6.238	Koyukuk
1777-2	2.16.840.1.113883.6.238	Lake Minchumina
1778-0	2.16.840.1.113883.6.238	Lime
1780-6	2.16.840.1.113883.6.238	Manley Hot Springs
1779-8	2.16.840.1.113883.6.238	Mcgrath
1781-4	2.16.840.1.113883.6.238	Mentasta Lake
1782-2	2.16.840.1.113883.6.238	Minto
1783-0	2.16.840.1.113883.6.238	Nenana
1784-8	2.16.840.1.113883.6.238	Nikolai
1785-5	2.16.840.1.113883.6.238	Ninilchik
1786-3	2.16.840.1.113883.6.238	Nondalton
1787-1	2.16.840.1.113883.6.238	Northway
1788-9	2.16.840.1.113883.6.238	Nulato
1789-7	2.16.840.1.113883.6.238	Pedro Bay
1790-5	2.16.840.1.113883.6.238	Rampart
1791-3	2.16.840.1.113883.6.238	Ruby
1792-1	2.16.840.1.113883.6.238	Salamatof
1793-9	2.16.840.1.113883.6.238	Seldovia
1795-4	2.16.840.1.113883.6.238	Shageluk
1794-7	2.16.840.1.113883.6.238	Slana
1796-2	2.16.840.1.113883.6.238	Stevens
1797-0	2.16.840.1.113883.6.238	Stony River
1798-8	2.16.840.1.113883.6.238	Takotna
1799-6	2.16.840.1.113883.6.238	Tanacross
1800-2	2.16.840.1.113883.6.238	Tanaina
1801-0	2.16.840.1.113883.6.238	Tanana
1802-8	2.16.840.1.113883.6.238	Tanana Chiefs
1803-6	2.16.840.1.113883.6.238	Tazlina
1804-4	2.16.840.1.113883.6.238	Telida
1805-1	2.16.840.1.113883.6.238	Tetlin
1806-9	2.16.840.1.113883.6.238	Tok
1807-7	2.16.840.1.113883.6.238	Tyonek
1808-5	2.16.840.1.113883.6.238	Venetie
1809-3	2.16.840.1.113883.6.238	Wiseman
1078-5	2.16.840.1.113883.6.238	Cayuse
1080-1	2.16.840.1.113883.6.238	Chehalis
1086-8	2.16.840.1.113883.6.238	Chemehuevi
1100-7	2.16.840.1.113883.6.238	Cherokee Shawnee

1106-4	2.16.840.1.113883.6.238	Cheyenne-Arapaho
1112-2	2.16.840.1.113883.6.238	Chickasaw
1153-6	2.16.840.1.113883.6.238	Chitimacha
1165-0	2.16.840.1.113883.6.238	Clear Lake
1167-6	2.16.840.1.113883.6.238	Coeur D'Alene
1169-2	2.16.840.1.113883.6.238	Coharie
1171-8	2.16.840.1.113883.6.238	Colorado River
1173-4	2.16.840.1.113883.6.238	Colville
1180-9	2.16.840.1.113883.6.238	Coos
1178-3	2.16.840.1.113883.6.238	Coos, Lower Umpqua, Siuslaw
1182-5	2.16.840.1.113883.6.238	Coquilles
1184-1	2.16.840.1.113883.6.238	Costanoan
1189-0	2.16.840.1.113883.6.238	Cowlitz
1191-6	2.16.840.1.113883.6.238	Cree
1207-0	2.16.840.1.113883.6.238	Croatan
1209-6	2.16.840.1.113883.6.238	Crow
1250-0	2.16.840.1.113883.6.238	Esselen
1252-6	2.16.840.1.113883.6.238	Fort Belknap
1254-2	2.16.840.1.113883.6.238	Fort Berthold
1258-3	2.16.840.1.113883.6.238	Fort Hall
1256-7	2.16.840.1.113883.6.238	Fort Mcdowell
1260-9	2.16.840.1.113883.6.238	Gabrieleno
1262-5	2.16.840.1.113883.6.238	Grand Ronde
1267-4	2.16.840.1.113883.6.238	Haliwa
1269-0	2.16.840.1.113883.6.238	Hidatsa
1275-7	2.16.840.1.113883.6.238	Hoopa Extension
1277-3	2.16.840.1.113883.6.238	Houma
1279-9	2.16.840.1.113883.6.238	Inaja-Cosmit
1297-1	2.16.840.1.113883.6.238	Juaneno
1299-7	2.16.840.1.113883.6.238	Kalispel
1301-1	2.16.840.1.113883.6.238	Karuk
1303-7	2.16.840.1.113883.6.238	Kaw
1317-7	2.16.840.1.113883.6.238	Klamath
1319-3	2.16.840.1.113883.6.238	Konkow
1321-9	2.16.840.1.113883.6.238	Kootenai
1323-5	2.16.840.1.113883.6.238	Lassik
1340-9	2.16.840.1.113883.6.238	Lumbee
1342-5	2.16.840.1.113883.6.238	Lummi
1348-2	2.16.840.1.113883.6.238	Makah
1350-8	2.16.840.1.113883.6.238	Maliseet
1352-4	2.16.840.1.113883.6.238	Mandan
1354-0	2.16.840.1.113883.6.238	Mattaponi
1356-5	2.16.840.1.113883.6.238	Menominee

1363-1	2.16.840.1.113883.6.238	Miccosukee
1368-0	2.16.840.1.113883.6.238	Mission Indians
1370-6	2.16.840.1.113883.6.238	Miwok
1372-2	2.16.840.1.113883.6.238	Modoc
1374-8	2.16.840.1.113883.6.238	Mohegan
1376-3	2.16.840.1.113883.6.238	Mono
1378-9	2.16.840.1.113883.6.238	Nanticoke
1380-5	2.16.840.1.113883.6.238	Narragansett
1387-0	2.16.840.1.113883.6.238	Nez Perce
1389-6	2.16.840.1.113883.6.238	Nomalaki
1403-5	2.16.840.1.113883.6.238	Omaha
1405-0	2.16.840.1.113883.6.238	Oregon Athabaskan
1407-6	2.16.840.1.113883.6.238	Osage
1409-2	2.16.840.1.113883.6.238	Otoe-Missouria
1439-9	2.16.840.1.113883.6.238	Pamunkey
1448-0	2.16.840.1.113883.6.238	Penobscot
1460-5	2.16.840.1.113883.6.238	Piscataway
1462-1	2.16.840.1.113883.6.238	Pit River
1487-8	2.16.840.1.113883.6.238	Powhatan
1541-2	2.16.840.1.113883.6.238	Quapaw
1543-8	2.16.840.1.113883.6.238	Quinault
1010-8	2.16.840.1.113883.6.238	Apache
1011-6	2.16.840.1.113883.6.238	Chiricahua
1012-4	2.16.840.1.113883.6.238	Fort Sill Apache
1013-2	2.16.840.1.113883.6.238	Jicarilla Apache
1014-0	2.16.840.1.113883.6.238	Lipan Apache
1015-7	2.16.840.1.113883.6.238	Mescalero Apache
1016-5	2.16.840.1.113883.6.238	Oklahoma Apache
1017-3	2.16.840.1.113883.6.238	Payson Apache
1018-1	2.16.840.1.113883.6.238	San Carlos Apache
1019-9	2.16.840.1.113883.6.238	White Mountain Apache
1021-5	2.16.840.1.113883.6.238	Arapaho
1022-3	2.16.840.1.113883.6.238	Northern Arapaho
1023-1	2.16.840.1.113883.6.238	Southern Arapaho
1024-9	2.16.840.1.113883.6.238	Wind River Arapaho
1030-6	2.16.840.1.113883.6.238	Assiniboine Sioux
1031-4	2.16.840.1.113883.6.238	Fort Peck Assiniboine Sioux
1041-3	2.16.840.1.113883.6.238	Caddo
1042-1	2.16.840.1.113883.6.238	Oklahoma Cado
1044-7	2.16.840.1.113883.6.238	Cahuilla
1045-4	2.16.840.1.113883.6.238	Agua Caliente Cahuilla
1046-2	2.16.840.1.113883.6.238	Augustine
1047-0	2.16.840.1.113883.6.238	Cabazon

1048-8	2.16.840.1.113883.6.238	Los Coyotes
1049-6	2.16.840.1.113883.6.238	Morongo
1050-4	2.16.840.1.113883.6.238	Santa Rosa Cahuilla
1051-2	2.16.840.1.113883.6.238	Torres-Martinez
1053-8	2.16.840.1.113883.6.238	California Tribes
1054-6	2.16.840.1.113883.6.238	Cahto
1055-3	2.16.840.1.113883.6.238	Chimariko
1056-1	2.16.840.1.113883.6.238	Coast Miwok
1057-9	2.16.840.1.113883.6.238	Digger
1058-7	2.16.840.1.113883.6.238	Kawaiisu
1059-5	2.16.840.1.113883.6.238	Kern River
1060-3	2.16.840.1.113883.6.238	Mattole
1061-1	2.16.840.1.113883.6.238	Red Wood
1062-9	2.16.840.1.113883.6.238	Santa Rosa
1063-7	2.16.840.1.113883.6.238	Takelma
1064-5	2.16.840.1.113883.6.238	Wappo
1065-2	2.16.840.1.113883.6.238	Yana
1066-0	2.16.840.1.113883.6.238	Yuki
1082-7	2.16.840.1.113883.6.238	Chemakuan
1083-5	2.16.840.1.113883.6.238	Hoh
1084-3	2.16.840.1.113883.6.238	Quileute
1088-4	2.16.840.1.113883.6.238	Cherokee
1089-2	2.16.840.1.113883.6.238	Cherokee Alabama
1090-0	2.16.840.1.113883.6.238	Cherokees of Northeast Alabama
1091-8	2.16.840.1.113883.6.238	Cherokees of Southeast Alabama
1092-6	2.16.840.1.113883.6.238	Eastern Cherokee
1093-4	2.16.840.1.113883.6.238	Echota Cherokee
1094-2	2.16.840.1.113883.6.238	Etowah Cherokee
1095-9	2.16.840.1.113883.6.238	Northern Cherokee
1096-7	2.16.840.1.113883.6.238	Tuscola
1097-5	2.16.840.1.113883.6.238	United Keetowah Band of Cherokee
1098-3	2.16.840.1.113883.6.238	Western Cherokee
1102-3	2.16.840.1.113883.6.238	Cheyenne
1103-1	2.16.840.1.113883.6.238	Northern Cheyenne
1104-9	2.16.840.1.113883.6.238	Southern Cheyenne
1108-0	2.16.840.1.113883.6.238	Chickahominy
1109-8	2.16.840.1.113883.6.238	Eastern Chickahominy
1110-6	2.16.840.1.113883.6.238	Western Chickahominy
1114-8	2.16.840.1.113883.6.238	Chinook
1115-5	2.16.840.1.113883.6.238	Clatsop
1116-3	2.16.840.1.113883.6.238	Columbia River Chinook
1117-1	2.16.840.1.113883.6.238	Kathlamet
1118-9	2.16.840.1.113883.6.238	Upper Chinook

1119-7	2.16.840.1.113883.6.238	Wakiakum Chinook
1120-5	2.16.840.1.113883.6.238	Willapa Chinook
1121-3	2.16.840.1.113883.6.238	Wishram
1123-9	2.16.840.1.113883.6.238	Chippewa
1124-7	2.16.840.1.113883.6.238	Bad River
1125-4	2.16.840.1.113883.6.238	Bay Mills Chippewa
1126-2	2.16.840.1.113883.6.238	Bois Forte
1127-0	2.16.840.1.113883.6.238	Burt Lake Chippewa
1128-8	2.16.840.1.113883.6.238	Fond du Lac
1129-6	2.16.840.1.113883.6.238	Grand Portage
1130-4	2.16.840.1.113883.6.238	Grand Traverse Band of Ottawa-Chippewa
1131-2	2.16.840.1.113883.6.238	Keweenaw
1132-0	2.16.840.1.113883.6.238	Lac Courte Oreilles
1134-6	2.16.840.1.113883.6.238	Lac Vieux Desert Chippewa
1133-8	2.16.840.1.113883.6.238	Lac du Flambeau
1135-3	2.16.840.1.113883.6.238	Lake Superior
1136-1	2.16.840.1.113883.6.238	Leech Lake
1137-9	2.16.840.1.113883.6.238	Little Shell Chippewa
1138-7	2.16.840.1.113883.6.238	Mille Lacs
1139-5	2.16.840.1.113883.6.238	Minnesota Chippewa
1140-3	2.16.840.1.113883.6.238	Ontonagon
1141-1	2.16.840.1.113883.6.238	Red Cliff Chippewa
1142-9	2.16.840.1.113883.6.238	Red Lake Chippewa
1143-7	2.16.840.1.113883.6.238	Saginaw Chippewa
1145-2	2.16.840.1.113883.6.238	Sault Ste. Marie Chippewa
1146-0	2.16.840.1.113883.6.238	Sokoagon Chippewa
1144-5	2.16.840.1.113883.6.238	St. Croix Chippewa
1147-8	2.16.840.1.113883.6.238	Turtle Mountain
1148-6	2.16.840.1.113883.6.238	White Earth
1150-2	2.16.840.1.113883.6.238	Chippewa Cree
1151-0	2.16.840.1.113883.6.238	Rocky Boy's Chippewa Cree
1155-1	2.16.840.1.113883.6.238	Choctaw
1156-9	2.16.840.1.113883.6.238	Clifton Choctaw
1157-7	2.16.840.1.113883.6.238	Jena Choctaw
1158-5	2.16.840.1.113883.6.238	Mississippi Choctaw
1159-3	2.16.840.1.113883.6.238	Mowa Band of Choctaw
1160-1	2.16.840.1.113883.6.238	Oklahoma Choctaw
1162-7	2.16.840.1.113883.6.238	Chumash
1163-5	2.16.840.1.113883.6.238	Santa Ynez
1175-9	2.16.840.1.113883.6.238	Comanche
1176-7	2.16.840.1.113883.6.238	Oklahoma Comanche
1186-6	2.16.840.1.113883.6.238	Coushatta
1187-4	2.16.840.1.113883.6.238	Alabama Coushatta

1193-2	2.16.840.1.113883.6.238	Creek
1194-0	2.16.840.1.113883.6.238	Alabama Creek
1195-7	2.16.840.1.113883.6.238	Alabama Quassarte
1196-5	2.16.840.1.113883.6.238	Eastern Creek
1197-3	2.16.840.1.113883.6.238	Eastern Muscogee
1198-1	2.16.840.1.113883.6.238	Kialegee
1199-9	2.16.840.1.113883.6.238	Lower Muscogee
1200-5	2.16.840.1.113883.6.238	Machis Lower Creek Indian
1201-3	2.16.840.1.113883.6.238	Poarch Band
1202-1	2.16.840.1.113883.6.238	Principal Creek Indian Nation
1203-9	2.16.840.1.113883.6.238	Star Clan of Muscogee Creeks
1204-7	2.16.840.1.113883.6.238	Thlopthlocco
1205-4	2.16.840.1.113883.6.238	Tuckabachee
1211-2	2.16.840.1.113883.6.238	Cupeno
1212-0	2.16.840.1.113883.6.238	Agua Caliente
1214-6	2.16.840.1.113883.6.238	Delaware
1215-3	2.16.840.1.113883.6.238	Eastern Delaware
1216-1	2.16.840.1.113883.6.238	Lenni-Lenape
1217-9	2.16.840.1.113883.6.238	Munsee
1218-7	2.16.840.1.113883.6.238	Oklahoma Delaware
1219-5	2.16.840.1.113883.6.238	Rampough Mountain
1220-3	2.16.840.1.113883.6.238	Sand Hill
1222-9	2.16.840.1.113883.6.238	Diegueno
1223-7	2.16.840.1.113883.6.238	Campo
1224-5	2.16.840.1.113883.6.238	Capitan Grande
1225-2	2.16.840.1.113883.6.238	Cuyapaipe
1226-0	2.16.840.1.113883.6.238	La Posta
1227-8	2.16.840.1.113883.6.238	Manzanita
1228-6	2.16.840.1.113883.6.238	Mesa Grande
1229-4	2.16.840.1.113883.6.238	San Pasqual
1230-2	2.16.840.1.113883.6.238	Santa Ysabel
1231-0	2.16.840.1.113883.6.238	Sycuan
1233-6	2.16.840.1.113883.6.238	Eastern Tribes
1234-4	2.16.840.1.113883.6.238	Attacapa
1235-1	2.16.840.1.113883.6.238	Biloxi
1236-9	2.16.840.1.113883.6.238	Georgetown
1237-7	2.16.840.1.113883.6.238	Moor
1238-5	2.16.840.1.113883.6.238	Nansemond
1239-3	2.16.840.1.113883.6.238	Natchez
1240-1	2.16.840.1.113883.6.238	Nausu Waiwash
1241-9	2.16.840.1.113883.6.238	Nipmuc
1242-7	2.16.840.1.113883.6.238	Paugussett
1243-5	2.16.840.1.113883.6.238	Pocomoke Acohonock

1244-3	2.16.840.1.113883.6.238	Southeastern Indians
1245-0	2.16.840.1.113883.6.238	Susquehanock
1246-8	2.16.840.1.113883.6.238	Tunica Biloxi
1247-6	2.16.840.1.113883.6.238	Waccamaw-Siousan
1248-4	2.16.840.1.113883.6.238	Wicomico
1264-1	2.16.840.1.113883.6.238	Gros Ventres
1265-8	2.16.840.1.113883.6.238	Atsina
1271-6	2.16.840.1.113883.6.238	Hoopa
1272-4	2.16.840.1.113883.6.238	Trinity
1273-2	2.16.840.1.113883.6.238	Whilkut
1281-5	2.16.840.1.113883.6.238	Iowa
1282-3	2.16.840.1.113883.6.238	Iowa of Kansas-Nebraska
1283-1	2.16.840.1.113883.6.238	Iowa of Oklahoma
1285-6	2.16.840.1.113883.6.238	Iroquois
1286-4	2.16.840.1.113883.6.238	Cayuga
1287-2	2.16.840.1.113883.6.238	Mohawk
1288-0	2.16.840.1.113883.6.238	Oneida
1289-8	2.16.840.1.113883.6.238	Onondaga
1290-6	2.16.840.1.113883.6.238	Seneca
1291-4	2.16.840.1.113883.6.238	Seneca Nation
1292-2	2.16.840.1.113883.6.238	Seneca-Cayuga
1293-0	2.16.840.1.113883.6.238	Tonawanda Seneca
1294-8	2.16.840.1.113883.6.238	Tuscarora
1295-5	2.16.840.1.113883.6.238	Wyandotte
1305-2	2.16.840.1.113883.6.238	Kickapoo
1306-0	2.16.840.1.113883.6.238	Oklahoma Kickapoo
1307-8	2.16.840.1.113883.6.238	Texas Kickapoo
1309-4	2.16.840.1.113883.6.238	Kiowa
1310-2	2.16.840.1.113883.6.238	Oklahoma Kiowa
1312-8	2.16.840.1.113883.6.238	Klallam
1313-6	2.16.840.1.113883.6.238	Jamestown
1314-4	2.16.840.1.113883.6.238	Lower Elwha
1315-1	2.16.840.1.113883.6.238	Port Gamble Klallam
1325-0	2.16.840.1.113883.6.238	Long Island
1326-8	2.16.840.1.113883.6.238	Matinecock
1327-6	2.16.840.1.113883.6.238	Montauk
1328-4	2.16.840.1.113883.6.238	Poospatuck
1329-2	2.16.840.1.113883.6.238	Setauket
1331-8	2.16.840.1.113883.6.238	Luiseno
1332-6	2.16.840.1.113883.6.238	La Jolla
1333-4	2.16.840.1.113883.6.238	Pala
1334-2	2.16.840.1.113883.6.238	Pauma
1335-9	2.16.840.1.113883.6.238	Pechanga

1336-7	2.16.840.1.113883.6.238	Soboba
1338-3	2.16.840.1.113883.6.238	Temecula
1337-5	2.16.840.1.113883.6.238	Twenty-Nine Palms
1344-1	2.16.840.1.113883.6.238	Maidu
1345-8	2.16.840.1.113883.6.238	Mountain Maidu
1346-6	2.16.840.1.113883.6.238	Nishinam
1358-1	2.16.840.1.113883.6.238	Miami
1359-9	2.16.840.1.113883.6.238	Illinois Miami
1360-7	2.16.840.1.113883.6.238	Indiana Miami
1361-5	2.16.840.1.113883.6.238	Oklahoma Miami
1365-6	2.16.840.1.113883.6.238	Micmac
1366-4	2.16.840.1.113883.6.238	Aroostook
1382-1	2.16.840.1.113883.6.238	Navajo
1383-9	2.16.840.1.113883.6.238	Alamo Navajo
1384-7	2.16.840.1.113883.6.238	Canoncito Navajo
1385-4	2.16.840.1.113883.6.238	Ramah Navajo
1391-2	2.16.840.1.113883.6.238	Northwest Tribes
1392-0	2.16.840.1.113883.6.238	Alsea
1393-8	2.16.840.1.113883.6.238	Celilo
1394-6	2.16.840.1.113883.6.238	Columbia
1395-3	2.16.840.1.113883.6.238	Kalapuya
1396-1	2.16.840.1.113883.6.238	Molala
1397-9	2.16.840.1.113883.6.238	Talakamish
1398-7	2.16.840.1.113883.6.238	Tenino
1399-5	2.16.840.1.113883.6.238	Tillamook
1400-1	2.16.840.1.113883.6.238	Wenatchee
1401-9	2.16.840.1.113883.6.238	Yahooskin
1411-8	2.16.840.1.113883.6.238	Ottawa
1412-6	2.16.840.1.113883.6.238	Burt Lake Ottawa
1413-4	2.16.840.1.113883.6.238	Michigan Ottawa
1414-2	2.16.840.1.113883.6.238	Oklahoma Ottawa
1416-7	2.16.840.1.113883.6.238	Paiute
1417-5	2.16.840.1.113883.6.238	Bishop
1418-3	2.16.840.1.113883.6.238	Bridgeport
1419-1	2.16.840.1.113883.6.238	Burns Paiute
1420-9	2.16.840.1.113883.6.238	Cedarville
1421-7	2.16.840.1.113883.6.238	Fort Bidwell
1422-5	2.16.840.1.113883.6.238	Fort Independence
1423-3	2.16.840.1.113883.6.238	Kaibab
1424-1	2.16.840.1.113883.6.238	Las Vegas
1425-8	2.16.840.1.113883.6.238	Lone Pine
1426-6	2.16.840.1.113883.6.238	Lovelock
1427-4	2.16.840.1.113883.6.238	Malheur Paiute

1428-2	2.16.840.1.113883.6.238	Moapa
1429-0	2.16.840.1.113883.6.238	Northern Paiute
1430-8	2.16.840.1.113883.6.238	Owens Valley
1431-6	2.16.840.1.113883.6.238	Pyramid Lake
1432-4	2.16.840.1.113883.6.238	San Juan Southern Paiute
1433-2	2.16.840.1.113883.6.238	Southern Paiute
1434-0	2.16.840.1.113883.6.238	Summit Lake
1435-7	2.16.840.1.113883.6.238	Utu Utu Gwaitu Paiute
1436-5	2.16.840.1.113883.6.238	Walker River
1437-3	2.16.840.1.113883.6.238	Yerington Paiute
1441-5	2.16.840.1.113883.6.238	Passamaquoddy
1442-3	2.16.840.1.113883.6.238	Indian Township
1443-1	2.16.840.1.113883.6.238	Pleasant Point Passamaquoddy
1445-6	2.16.840.1.113883.6.238	Pawnee
1446-4	2.16.840.1.113883.6.238	Oklahoma Pawnee
1450-6	2.16.840.1.113883.6.238	Peoria
1451-4	2.16.840.1.113883.6.238	Oklahoma Peoria
1453-0	2.16.840.1.113883.6.238	Pequot
1454-8	2.16.840.1.113883.6.238	Marshantucket Pequot
1456-3	2.16.840.1.113883.6.238	Pima
1457-1	2.16.840.1.113883.6.238	Gila River Pima-Maricopa
1458-9	2.16.840.1.113883.6.238	Salt River Pima-Maricopa
1464-7	2.16.840.1.113883.6.238	Pomo
1465-4	2.16.840.1.113883.6.238	Central Pomo
1466-2	2.16.840.1.113883.6.238	Dry Creek
1467-0	2.16.840.1.113883.6.238	Eastern Pomo
1468-8	2.16.840.1.113883.6.238	Kashia
1469-6	2.16.840.1.113883.6.238	Northern Pomo
1470-4	2.16.840.1.113883.6.238	Scotts Valley
1471-2	2.16.840.1.113883.6.238	Stonyford
1472-0	2.16.840.1.113883.6.238	Sulphur Bank
1474-6	2.16.840.1.113883.6.238	Ponca
1475-3	2.16.840.1.113883.6.238	Nebraska Ponca
1476-1	2.16.840.1.113883.6.238	Oklahoma Ponca
1478-7	2.16.840.1.113883.6.238	Potawatomi
1479-5	2.16.840.1.113883.6.238	Citizen Band Potawatomi
1480-3	2.16.840.1.113883.6.238	Forest County
1481-1	2.16.840.1.113883.6.238	Hannahville
1482-9	2.16.840.1.113883.6.238	Huron Potawatomi
1483-7	2.16.840.1.113883.6.238	Pokagon Potawatomi
1484-5	2.16.840.1.113883.6.238	Prairie Band
1485-2	2.16.840.1.113883.6.238	Wisconsin Potawatomi
1489-4	2.16.840.1.113883.6.238	Pueblo

1490-2	2.16.840.1.113883.6.238	Acoma
1491-0	2.16.840.1.113883.6.238	Arizona Tewa
1492-8	2.16.840.1.113883.6.238	Cochiti
1493-6	2.16.840.1.113883.6.238	Hopi
1494-4	2.16.840.1.113883.6.238	Isleta
1495-1	2.16.840.1.113883.6.238	Jemez
1496-9	2.16.840.1.113883.6.238	Keres
1497-7	2.16.840.1.113883.6.238	Laguna
1498-5	2.16.840.1.113883.6.238	Nambe
1499-3	2.16.840.1.113883.6.238	Picuris
1500-8	2.16.840.1.113883.6.238	Piro
1501-6	2.16.840.1.113883.6.238	Pojoaque
1502-4	2.16.840.1.113883.6.238	San Felipe
1503-2	2.16.840.1.113883.6.238	San Ildefonso
1506-5	2.16.840.1.113883.6.238	San Juan
1505-7	2.16.840.1.113883.6.238	San Juan De
1504-0	2.16.840.1.113883.6.238	San Juan Pueblo
1507-3	2.16.840.1.113883.6.238	Sandia
1508-1	2.16.840.1.113883.6.238	Santa Ana
1509-9	2.16.840.1.113883.6.238	Santa Clara
1510-7	2.16.840.1.113883.6.238	Santo Domingo
1511-5	2.16.840.1.113883.6.238	Taos
1512-3	2.16.840.1.113883.6.238	Tesuque
1513-1	2.16.840.1.113883.6.238	Tewa
1514-9	2.16.840.1.113883.6.238	Tigua
1515-6	2.16.840.1.113883.6.238	Zia
1516-4	2.16.840.1.113883.6.238	Zuni
1518-0	2.16.840.1.113883.6.238	Puget Sound Salish
1519-8	2.16.840.1.113883.6.238	Duwamish
1520-6	2.16.840.1.113883.6.238	Kikiallus
1521-4	2.16.840.1.113883.6.238	Lower Skagit
1522-2	2.16.840.1.113883.6.238	Muckleshoot
1523-0	2.16.840.1.113883.6.238	Nisqually
1524-8	2.16.840.1.113883.6.238	Nooksack
1525-5	2.16.840.1.113883.6.238	Port Madison
1526-3	2.16.840.1.113883.6.238	Puyallup
1527-1	2.16.840.1.113883.6.238	Samish
1528-9	2.16.840.1.113883.6.238	Sauk-Suiattle
1529-7	2.16.840.1.113883.6.238	Skokomish
1530-5	2.16.840.1.113883.6.238	Skykomish
1531-3	2.16.840.1.113883.6.238	Snohomish
1532-1	2.16.840.1.113883.6.238	Snoqualmie
1533-9	2.16.840.1.113883.6.238	Squaxin Island

1534-7	2.16.840.1.113883.6.238	Steilacoom
1535-4	2.16.840.1.113883.6.238	Stillaguamish
1536-2	2.16.840.1.113883.6.238	Suquamish
1537-0	2.16.840.1.113883.6.238	Swinomish
1538-8	2.16.840.1.113883.6.238	Tulalip
1539-6	2.16.840.1.113883.6.238	Upper Skagit
1551-1	2.16.840.1.113883.6.238	Sac and Fox
1552-9	2.16.840.1.113883.6.238	Iowa Sac and Fox
1553-7	2.16.840.1.113883.6.238	Missouri Sac and Fox
1554-5	2.16.840.1.113883.6.238	Oklahoma Sac and Fox
1566-9	2.16.840.1.113883.6.238	Seminole
1567-7	2.16.840.1.113883.6.238	Big Cypress
1568-5	2.16.840.1.113883.6.238	Brighton
1569-3	2.16.840.1.113883.6.238	Florida Seminole
1570-1	2.16.840.1.113883.6.238	Hollywood Seminole
1571-9	2.16.840.1.113883.6.238	Oklahoma Seminole
1573-5	2.16.840.1.113883.6.238	Serrano
1574-3	2.16.840.1.113883.6.238	San Manual
1578-4	2.16.840.1.113883.6.238	Shawnee
1579-2	2.16.840.1.113883.6.238	Absentee Shawnee
1580-0	2.16.840.1.113883.6.238	Eastern Shawnee
1586-7	2.16.840.1.113883.6.238	Shoshone
1587-5	2.16.840.1.113883.6.238	Battle Mountain
1588-3	2.16.840.1.113883.6.238	Duckwater
1589-1	2.16.840.1.113883.6.238	Elko
1590-9	2.16.840.1.113883.6.238	Ely
1591-7	2.16.840.1.113883.6.238	Goshute
1592-5	2.16.840.1.113883.6.238	Panamint
1593-3	2.16.840.1.113883.6.238	Ruby Valley
1594-1	2.16.840.1.113883.6.238	Skull Valley
1595-8	2.16.840.1.113883.6.238	South Fork Shoshone
1596-6	2.16.840.1.113883.6.238	Te-Moak Western Shoshone
1597-4	2.16.840.1.113883.6.238	Timbi-Sha Shoshone
1598-2	2.16.840.1.113883.6.238	Washakie
1599-0	2.16.840.1.113883.6.238	Wind River Shoshone
1600-6	2.16.840.1.113883.6.238	Yomba
1602-2	2.16.840.1.113883.6.238	Shoshone Paiute
1603-0	2.16.840.1.113883.6.238	Duck Valley
1604-8	2.16.840.1.113883.6.238	Fallon
1605-5	2.16.840.1.113883.6.238	Fort McDermitt
1609-7	2.16.840.1.113883.6.238	Sioux
1610-5	2.16.840.1.113883.6.238	Blackfoot Sioux
1611-3	2.16.840.1.113883.6.238	Brule Sioux

1612-1	2.16.840.1.113883.6.238	Cheyenne River Sioux
1613-9	2.16.840.1.113883.6.238	Crow Creek Sioux
1614-7	2.16.840.1.113883.6.238	Dakota Sioux
1615-4	2.16.840.1.113883.6.238	Flandreau Santee
1616-2	2.16.840.1.113883.6.238	Fort Peck
1617-0	2.16.840.1.113883.6.238	Lake Traverse Sioux
1618-8	2.16.840.1.113883.6.238	Lower Brule Sioux
1619-6	2.16.840.1.113883.6.238	Lower Sioux
1620-4	2.16.840.1.113883.6.238	Mdewakanton Sioux
1621-2	2.16.840.1.113883.6.238	Miniconjou
1622-0	2.16.840.1.113883.6.238	Oglala Sioux
1623-8	2.16.840.1.113883.6.238	Pine Ridge Sioux
1624-6	2.16.840.1.113883.6.238	Pipestone Sioux
1625-3	2.16.840.1.113883.6.238	Prairie Island Sioux
1626-1	2.16.840.1.113883.6.238	Prior Lake Sioux
1627-9	2.16.840.1.113883.6.238	Rosebud Sioux
1628-7	2.16.840.1.113883.6.238	Sans Arc Sioux
1629-5	2.16.840.1.113883.6.238	Santee Sioux
1631-1	2.16.840.1.113883.6.238	Sisseton Sioux
1630-3	2.16.840.1.113883.6.238	Sisseton-Wahpeton
1632-9	2.16.840.1.113883.6.238	Spirit Lake Sioux
1633-7	2.16.840.1.113883.6.238	Standing Rock Sioux
1634-5	2.16.840.1.113883.6.238	Teton Sioux
1635-2	2.16.840.1.113883.6.238	Two Kettle Sioux
1636-0	2.16.840.1.113883.6.238	Upper Sioux
1637-8	2.16.840.1.113883.6.238	Wahpekute Sioux
1638-6	2.16.840.1.113883.6.238	Wahpeton Sioux
1639-4	2.16.840.1.113883.6.238	Wazhaza Sioux
1640-2	2.16.840.1.113883.6.238	Yankton Sioux
1641-0	2.16.840.1.113883.6.238	Yanktonai Sioux
1653-5	2.16.840.1.113883.6.238	Tohono O'Odham
1654-3	2.16.840.1.113883.6.238	Ak-Chin
1655-0	2.16.840.1.113883.6.238	Gila Bend
1656-8	2.16.840.1.113883.6.238	San Xavier
1657-6	2.16.840.1.113883.6.238	Sells
1667-5	2.16.840.1.113883.6.238	Umpqua
1668-3	2.16.840.1.113883.6.238	Cow Creek Umpqua
1670-9	2.16.840.1.113883.6.238	Ute
1671-7	2.16.840.1.113883.6.238	Allen Canyon
1672-5	2.16.840.1.113883.6.238	Uintah Ute
1673-3	2.16.840.1.113883.6.238	Ute Mountain Ute
1679-0	2.16.840.1.113883.6.238	Wampanoag
1680-8	2.16.840.1.113883.6.238	Gay Head Wampanoag

1681-6	2.16.840.1.113883.6.238	Mashpee Wampanoag
1687-3	2.16.840.1.113883.6.238	Washoe
1688-1	2.16.840.1.113883.6.238	Alpine
1689-9	2.16.840.1.113883.6.238	Carson
1690-7	2.16.840.1.113883.6.238	Dresslerville
1696-4	2.16.840.1.113883.6.238	Winnebago
1697-2	2.16.840.1.113883.6.238	Ho-chunk
1698-0	2.16.840.1.113883.6.238	Nebraska Winnebago
1724-4	2.16.840.1.113883.6.238	Yuman
1725-1	2.16.840.1.113883.6.238	Cocopah
1726-9	2.16.840.1.113883.6.238	Havasupai
1727-7	2.16.840.1.113883.6.238	Hualapai
1728-5	2.16.840.1.113883.6.238	Maricopa
1729-3	2.16.840.1.113883.6.238	Mohave
1730-1	2.16.840.1.113883.6.238	Quechan
1731-9	2.16.840.1.113883.6.238	Yavapai
1732-7	2.16.840.1.113883.6.238	Yurok
1733-5	2.16.840.1.113883.6.238	Coast Yurok
1068-6	2.16.840.1.113883.6.238	Canadian and Latin American Indian
1069-4	2.16.840.1.113883.6.238	Canadian Indian
1070-2	2.16.840.1.113883.6.238	Central American Indian
1071-0	2.16.840.1.113883.6.238	French American Indian
1072-8	2.16.840.1.113883.6.238	Mexican American Indian
1073-6	2.16.840.1.113883.6.238	South American Indian
1545-3	2.16.840.1.113883.6.238	Rappahannock
1547-9	2.16.840.1.113883.6.238	Reno-Sparks
1549-5	2.16.840.1.113883.6.238	Round Valley
1556-0	2.16.840.1.113883.6.238	Salinan
1558-6	2.16.840.1.113883.6.238	Salish
1560-2	2.16.840.1.113883.6.238	Salish and Kootenai
1562-8	2.16.840.1.113883.6.238	Schaghticoke
1564-4	2.16.840.1.113883.6.238	Scott Valley
1576-8	2.16.840.1.113883.6.238	Shasta
1582-6	2.16.840.1.113883.6.238	Shinnecock
1584-2	2.16.840.1.113883.6.238	Shoalwater Bay
1607-1	2.16.840.1.113883.6.238	Siletz
1643-6	2.16.840.1.113883.6.238	Siuslaw
1074-4	2.16.840.1.113883.6.238	Spanish American Indian
1645-1	2.16.840.1.113883.6.238	Spokane
1647-7	2.16.840.1.113883.6.238	Stewart
1649-3	2.16.840.1.113883.6.238	Stockbridge
1651-9	2.16.840.1.113883.6.238	Susanville
1659-2	2.16.840.1.113883.6.238	Tolowa

1661-8	2.16.840.1.113883.6.238	Tonkawa
1663-4	2.16.840.1.113883.6.238	Tygh
1665-9	2.16.840.1.113883.6.238	Umatilla
1675-8	2.16.840.1.113883.6.238	Wailaki
1677-4	2.16.840.1.113883.6.238	Walla-Walla
1683-2	2.16.840.1.113883.6.238	Warm Springs
1685-7	2.16.840.1.113883.6.238	Wascopum
1692-3	2.16.840.1.113883.6.238	Wichita
1694-9	2.16.840.1.113883.6.238	Wind River
1700-4	2.16.840.1.113883.6.238	Winnemucca
1702-0	2.16.840.1.113883.6.238	Wintun
1704-6	2.16.840.1.113883.6.238	Wiyot
1705-3	2.16.840.1.113883.6.238	Table Bluff
1707-9	2.16.840.1.113883.6.238	Yakama
1709-5	2.16.840.1.113883.6.238	Yakama Cowlitz
1711-1	2.16.840.1.113883.6.238	Yaqui
1712-9	2.16.840.1.113883.6.238	Barrio Libre
1713-7	2.16.840.1.113883.6.238	Pascua Yaqui
1715-2	2.16.840.1.113883.6.238	Yavapai Apache
1717-8	2.16.840.1.113883.6.238	Yokuts
1718-6	2.16.840.1.113883.6.238	Chukchansi
1719-4	2.16.840.1.113883.6.238	Tachi
1720-2	2.16.840.1.113883.6.238	Tule River
1722-8	2.16.840.1.113883.6.238	Yuchi
2106-3	2.16.840.1.113883.6.238	White
2129-5	2.16.840.1.113883.6.238	Arab
2108-9	2.16.840.1.113883.6.238	European
2109-7	2.16.840.1.113883.6.238	Armenian
2110-5	2.16.840.1.113883.6.238	English
2111-3	2.16.840.1.113883.6.238	French
2112-1	2.16.840.1.113883.6.238	German
2113-9	2.16.840.1.113883.6.238	Irish
2114-7	2.16.840.1.113883.6.238	Italian
2115-4	2.16.840.1.113883.6.238	Polish
2116-2	2.16.840.1.113883.6.238	Scottish
2118-8	2.16.840.1.113883.6.238	Middle Eastern or North African
2126-1	2.16.840.1.113883.6.238	Afghanistani
2119-6	2.16.840.1.113883.6.238	Assyrian
2120-4	2.16.840.1.113883.6.238	Egyptian
2121-2	2.16.840.1.113883.6.238	Iranian
2122-0	2.16.840.1.113883.6.238	Iraqi
2127-9	2.16.840.1.113883.6.238	Israeili
2123-8	2.16.840.1.113883.6.238	Lebanese

2124-6	2.16.840.1.113883.6.238	Palestinian
2125-3	2.16.840.1.113883.6.238	Syrian

Ethnicity

Value Set Name:	Ethnicity
Value Set OID:	2.16.840.1.113883.1.11.15836
Value Set Author:	HL7
Value Set Version:	20080101
Base Code Set(s):	CDC Race and Ethnicity codes

Code	CodeSet OID	Description
2135-2	2.16.840.1.113883.6.238	Hispanic or Latino
2182-4	2.16.840.1.113883.6.238	Cuban
2184-0	2.16.840.1.113883.6.238	Dominican
2155-0	2.16.840.1.113883.6.238	Central American
2163-4	2.16.840.1.113883.6.238	Canal Zone
2162-6	2.16.840.1.113883.6.238	Central American Indian
2156-8	2.16.840.1.113883.6.238	Costa Rican
2157-6	2.16.840.1.113883.6.238	Guatemalan
2158-4	2.16.840.1.113883.6.238	Honduran
2159-2	2.16.840.1.113883.6.238	Nicaraguan
2160-0	2.16.840.1.113883.6.238	Panamanian
2161-8	2.16.840.1.113883.6.238	Salvadoran
2148-5	2.16.840.1.113883.6.238	Mexican
2151-9	2.16.840.1.113883.6.238	Chicano
2152-7	2.16.840.1.113883.6.238	La Raza
2149-3	2.16.840.1.113883.6.238	Mexican American
2153-5	2.16.840.1.113883.6.238	Mexican American Indian
2150-1	2.16.840.1.113883.6.238	Mexicano
2165-9	2.16.840.1.113883.6.238	South American
2166-7	2.16.840.1.113883.6.238	Argentinean
2167-5	2.16.840.1.113883.6.238	Bolivian
2168-3	2.16.840.1.113883.6.238	Chilean
2169-1	2.16.840.1.113883.6.238	Colombian
2176-6	2.16.840.1.113883.6.238	Criollo
2170-9	2.16.840.1.113883.6.238	Ecuadorian
2171-7	2.16.840.1.113883.6.238	Paraguayan
2172-5	2.16.840.1.113883.6.238	Peruvian
2175-8	2.16.840.1.113883.6.238	South American Indian
2173-3	2.16.840.1.113883.6.238	Uruguayan

2174-1	2.16.840.1.113883.6.238	Venezuelan
2137-8	2.16.840.1.113883.6.238	Spaniard
2138-6	2.16.840.1.113883.6.238	Andalusian
2139-4	2.16.840.1.113883.6.238	Asturian
2142-8	2.16.840.1.113883.6.238	Belearic Islander
2145-1	2.16.840.1.113883.6.238	Canarian
2140-2	2.16.840.1.113883.6.238	Castillian
2141-0	2.16.840.1.113883.6.238	Catalonian
2143-6	2.16.840.1.113883.6.238	Gallego
2146-9	2.16.840.1.113883.6.238	Spanish Basque
2144-4	2.16.840.1.113883.6.238	Valencian
2178-2	2.16.840.1.113883.6.238	Latin American
2180-8	2.16.840.1.113883.6.238	Puerto Rican
2186-5	2.16.840.1.113883.6.238	Not Hispanic or Latino

Langauge

Value Set Name:	Human Language
Value Set OID:	2.16.840.1.113883.1.11.11526
Value Set Author:	HL7
Value Set Version:	20080101
Base Code Set(s):	ISO 639-2 plus ISO 3166

Code	CodeSet OID	Description
aa	2.16.840.1.113883.6.121	Afar
ab	2.16.840.1.113883.6.121	Abkhazian
ae	2.16.840.1.113883.6.121	Avestan
af	2.16.840.1.113883.6.121	Afrikaans
ak	2.16.840.1.113883.6.121	Akan
am	2.16.840.1.113883.6.121	Amharic
an	2.16.840.1.113883.6.121	Aragonese
ar	2.16.840.1.113883.6.121	Arabic
as	2.16.840.1.113883.6.121	Assamese
av	2.16.840.1.113883.6.121	Avaric
ay	2.16.840.1.113883.6.121	Aymara
az	2.16.840.1.113883.6.121	Azerbaijani
ba	2.16.840.1.113883.6.121	Bashkir
be	2.16.840.1.113883.6.121	Belarusian
bg	2.16.840.1.113883.6.121	Bulgarian
bh	2.16.840.1.113883.6.121	Bihari
bi	2.16.840.1.113883.6.121	Bislama

bm	2.16.840.1.113883.6.121	Bambara
bn	2.16.840.1.113883.6.121	Bengali
bo	2.16.840.1.113883.6.121	Tibetan
br	2.16.840.1.113883.6.121	Breton
bs	2.16.840.1.113883.6.121	Bosnian
ca	2.16.840.1.113883.6.121	Catalan; Valencian
ce	2.16.840.1.113883.6.121	Chechen
ch	2.16.840.1.113883.6.121	Chamorro
co	2.16.840.1.113883.6.121	Corsican
cr	2.16.840.1.113883.6.121	Cree
cs	2.16.840.1.113883.6.121	Czech
cu	2.16.840.1.113883.6.121	Church Slavic; Old Slavonic; Church Slavonic; Old Bulga Slavonic
cv	2.16.840.1.113883.6.121	Chuvash
cy	2.16.840.1.113883.6.121	Welsh
da	2.16.840.1.113883.6.121	Danish
de	2.16.840.1.113883.6.121	German
dv	2.16.840.1.113883.6.121	Divehi; Dhivehi; Maldivian
dz	2.16.840.1.113883.6.121	Dzongkha
ee	2.16.840.1.113883.6.121	Ewe
el	2.16.840.1.113883.6.121	Greek, Modern (1453-)
en	2.16.840.1.113883.6.121	English
eo	2.16.840.1.113883.6.121	Esperanto
es	2.16.840.1.113883.6.121	Spanish; Castilian
et	2.16.840.1.113883.6.121	Estonian
eu	2.16.840.1.113883.6.121	Basque
fa	2.16.840.1.113883.6.121	Persian
ff	2.16.840.1.113883.6.121	Fulah
fi	2.16.840.1.113883.6.121	Finnish
fj	2.16.840.1.113883.6.121	Fijian
fo	2.16.840.1.113883.6.121	Faroese
fr	2.16.840.1.113883.6.121	French
fy	2.16.840.1.113883.6.121	Western Frisian
ga	2.16.840.1.113883.6.121	Irish
gd	2.16.840.1.113883.6.121	Gaelic; Scottish Gaelic
gl	2.16.840.1.113883.6.121	Galician
gn	2.16.840.1.113883.6.121	Guarani

gu	2.16.840.1.113883.6.121	Gujarati
gv	2.16.840.1.113883.6.121	Manx
ha	2.16.840.1.113883.6.121	Hausa
he	2.16.840.1.113883.6.121	Hebrew
hi	2.16.840.1.113883.6.121	Hindi
ho	2.16.840.1.113883.6.121	Hiri Motu
hr	2.16.840.1.113883.6.121	Croatian
ht	2.16.840.1.113883.6.121	Haitian; Haitian Creole
hu	2.16.840.1.113883.6.121	Hungarian
hy	2.16.840.1.113883.6.121	Armenian
hz	2.16.840.1.113883.6.121	Herero
ia	2.16.840.1.113883.6.121	Interlingua (International Auxiliary Language Associati
id	2.16.840.1.113883.6.121	Indonesian
ie	2.16.840.1.113883.6.121	Interlingue; Occidental
ig	2.16.840.1.113883.6.121	Igbo
ii	2.16.840.1.113883.6.121	Sichuan Yi; Nuosu
ik	2.16.840.1.113883.6.121	Inupiaq
io	2.16.840.1.113883.6.121	Ido
is	2.16.840.1.113883.6.121	Icelandic
it	2.16.840.1.113883.6.121	Italian
iu	2.16.840.1.113883.6.121	Inuktitut
ja	2.16.840.1.113883.6.121	Japanese
jv	2.16.840.1.113883.6.121	Javanese
ka	2.16.840.1.113883.6.121	Georgian
kg	2.16.840.1.113883.6.121	Kongo
ki	2.16.840.1.113883.6.121	Kikuyu; Gikuyu
kj	2.16.840.1.113883.6.121	Kuanyama; Kwanyama
kk	2.16.840.1.113883.6.121	Kazakh
kl	2.16.840.1.113883.6.121	Kalaallisut; Greenlandic
km	2.16.840.1.113883.6.121	Central Khmer
kn	2.16.840.1.113883.6.121	Kannada
ko	2.16.840.1.113883.6.121	Korean
kr	2.16.840.1.113883.6.121	Kanuri
ks	2.16.840.1.113883.6.121	Kashmiri
ku	2.16.840.1.113883.6.121	Kurdish
kv	2.16.840.1.113883.6.121	Komi
kw	2.16.840.1.113883.6.121	Cornish
ky	2.16.840.1.113883.6.121	Kirghiz; Kyrgyz
la	2.16.840.1.113883.6.121	Latin
lb	2.16.840.1.113883.6.121	Luxembourgish; Letzeburgesch
lg	2.16.840.1.113883.6.121	Ganda

li	2.16.840.1.113883.6.121	Limburgan; Limburger; Limburgish
ln	2.16.840.1.113883.6.121	Lingala
lo	2.16.840.1.113883.6.121	Lao
lt	2.16.840.1.113883.6.121	Lithuanian
lu	2.16.840.1.113883.6.121	Luba-Katanga
lv	2.16.840.1.113883.6.121	Latvian
mg	2.16.840.1.113883.6.121	Malagasy
mh	2.16.840.1.113883.6.121	Marshallese
mi	2.16.840.1.113883.6.121	Maori
mk	2.16.840.1.113883.6.121	Macedonian
ml	2.16.840.1.113883.6.121	Malayalam
mn	2.16.840.1.113883.6.121	Mongolian
mo	2.16.840.1.113883.6.121	Moldavian
mr	2.16.840.1.113883.6.121	Marathi
ms	2.16.840.1.113883.6.121	Malay
mt	2.16.840.1.113883.6.121	Maltese
my	2.16.840.1.113883.6.121	Burmese
na	2.16.840.1.113883.6.121	Nauru
nb	2.16.840.1.113883.6.121	BokmÃ¥l, Norwegian; Norwegian BokmÃ¥l
nd	2.16.840.1.113883.6.121	Ndebele, North; North Ndebele
ne	2.16.840.1.113883.6.121	Nepali
ng	2.16.840.1.113883.6.121	Ndonga
nl	2.16.840.1.113883.6.121	Dutch; Flemish
nn	2.16.840.1.113883.6.121	Norwegian Nynorsk; Nynorsk, Norwegian
no	2.16.840.1.113883.6.121	Norwegian
nr	2.16.840.1.113883.6.121	Ndebele, South; South Ndebele
nv	2.16.840.1.113883.6.121	Navajo; Navaho
ny	2.16.840.1.113883.6.121	Chichewa; Chewa; Nyanja
oc	2.16.840.1.113883.6.121	Occitan (post 1500); ProvenÃ§al
oj	2.16.840.1.113883.6.121	Ojibwa
om	2.16.840.1.113883.6.121	Oromo
or	2.16.840.1.113883.6.121	Oriya
os	2.16.840.1.113883.6.121	Ossetian; Ossetic
pa	2.16.840.1.113883.6.121	Panjabi; Punjabi
pi	2.16.840.1.113883.6.121	Pali
pl	2.16.840.1.113883.6.121	Polish
ps	2.16.840.1.113883.6.121	Pushto; Pashto
pt	2.16.840.1.113883.6.121	Portuguese
qu	2.16.840.1.113883.6.121	Quechua
rm	2.16.840.1.113883.6.121	Romansh
rn	2.16.840.1.113883.6.121	Rundi

ro	2.16.840.1.113883.6.121	Romanian
ru	2.16.840.1.113883.6.121	Russian
rw	2.16.840.1.113883.6.121	Kinyarwanda
sa	2.16.840.1.113883.6.121	Sanskrit
sc	2.16.840.1.113883.6.121	Sardinian
sd	2.16.840.1.113883.6.121	Sindhi
se	2.16.840.1.113883.6.121	Northern Sami
sg	2.16.840.1.113883.6.121	Sango
si	2.16.840.1.113883.6.121	Sinhala; Sinhalese
sk	2.16.840.1.113883.6.121	Slovak
sl	2.16.840.1.113883.6.121	Slovenian
sm	2.16.840.1.113883.6.121	Samoan
sn	2.16.840.1.113883.6.121	Shona
so	2.16.840.1.113883.6.121	Somali
sq	2.16.840.1.113883.6.121	Albanian
sr	2.16.840.1.113883.6.121	Serbian
ss	2.16.840.1.113883.6.121	Swati
st	2.16.840.1.113883.6.121	Sotho, Southern
su	2.16.840.1.113883.6.121	Sundanese
sv	2.16.840.1.113883.6.121	Swedish
sw	2.16.840.1.113883.6.121	Swahili
ta	2.16.840.1.113883.6.121	Tamil
te	2.16.840.1.113883.6.121	Telugu
tg	2.16.840.1.113883.6.121	Tajik
th	2.16.840.1.113883.6.121	Thai
ti	2.16.840.1.113883.6.121	Tigrinya
tk	2.16.840.1.113883.6.121	Turkmen
tl	2.16.840.1.113883.6.121	Tagalog
tn	2.16.840.1.113883.6.121	Tswana
to	2.16.840.1.113883.6.121	Tonga (Tonga Islands)
tr	2.16.840.1.113883.6.121	Turkish
ts	2.16.840.1.113883.6.121	Tsonga
tt	2.16.840.1.113883.6.121	Tatar
tw	2.16.840.1.113883.6.121	Twi
ty	2.16.840.1.113883.6.121	Tahitian
ug	2.16.840.1.113883.6.121	Uighur; Uyghur
uk	2.16.840.1.113883.6.121	Ukrainian
ur	2.16.840.1.113883.6.121	Urdu
uz	2.16.840.1.113883.6.121	Uzbek
ve	2.16.840.1.113883.6.121	Venda
vi	2.16.840.1.113883.6.121	Vietnamese

vo	2.16.840.1.113883.6.121	VolapÃ¼k
wa	2.16.840.1.113883.6.121	Walloon
wo	2.16.840.1.113883.6.121	Wolof
xh	2.16.840.1.113883.6.121	Xhosa
yi	2.16.840.1.113883.6.121	Yiddish
yo	2.16.840.1.113883.6.121	Yoruba
za	2.16.840.1.113883.6.121	Zhuang; Chuang
zh	2.16.840.1.113883.6.121	Chinese
zu	2.16.840.1.113883.6.121	Zulu
ace	2.16.840.1.113883.6.121	Achinese
ach	2.16.840.1.113883.6.121	Acoli
ada	2.16.840.1.113883.6.121	Adangme
ady	2.16.840.1.113883.6.121	Adyghe; Adygei
afa	2.16.840.1.113883.6.121	Afro-Asiatic (Other)
afh	2.16.840.1.113883.6.121	Afrihili
ain	2.16.840.1.113883.6.121	Ainu
akk	2.16.840.1.113883.6.121	Akkadian
ale	2.16.840.1.113883.6.121	Aleut
alg	2.16.840.1.113883.6.121	Algonquian languages
alt	2.16.840.1.113883.6.121	Southern Altai
ang	2.16.840.1.113883.6.121	English, Old (ca.450-1100)
anp	2.16.840.1.113883.6.121	Angika
apa	2.16.840.1.113883.6.121	Apache languages
arc	2.16.840.1.113883.6.121	Official Aramaic (700-300 BCE); Imperial Aramaic (700
arn	2.16.840.1.113883.6.121	Mapudungun; Mapuche
arp	2.16.840.1.113883.6.121	Arapaho
art	2.16.840.1.113883.6.121	Artificial (Other)
arw	2.16.840.1.113883.6.121	Arawak
ast	2.16.840.1.113883.6.121	Asturian; Bable; Leonese; Asturleonese
ath	2.16.840.1.113883.6.121	Athapascan languages
aus	2.16.840.1.113883.6.121	Australian languages
awa	2.16.840.1.113883.6.121	Awadhi
bad	2.16.840.1.113883.6.121	Banda languages
bai	2.16.840.1.113883.6.121	Bamileke languages
bal	2.16.840.1.113883.6.121	Baluchi
ban	2.16.840.1.113883.6.121	Balinese
bas	2.16.840.1.113883.6.121	Basa
bat	2.16.840.1.113883.6.121	Baltic (Other)
bej	2.16.840.1.113883.6.121	Beja; Bedawiyet
bem	2.16.840.1.113883.6.121	Bemba

ber	2.16.840.1.113883.6.121	Berber (Other)
bho	2.16.840.1.113883.6.121	Bhojpuri
bik	2.16.840.1.113883.6.121	Bikol
bin	2.16.840.1.113883.6.121	Bini; Edo
bla	2.16.840.1.113883.6.121	Siksika
bnt	2.16.840.1.113883.6.121	Bantu (Other)
bra	2.16.840.1.113883.6.121	Braj
btk	2.16.840.1.113883.6.121	Batak languages
bua	2.16.840.1.113883.6.121	Buriat
bug	2.16.840.1.113883.6.121	Buginese
byn	2.16.840.1.113883.6.121	Blin; Bilin
cad	2.16.840.1.113883.6.121	Caddo
cai	2.16.840.1.113883.6.121	Central American Indian (Other)
car	2.16.840.1.113883.6.121	Galibi Carib
cau	2.16.840.1.113883.6.121	Caucasian (Other)
ceb	2.16.840.1.113883.6.121	Cebuano
cel	2.16.840.1.113883.6.121	Celtic (Other)
chb	2.16.840.1.113883.6.121	Chibcha
chg	2.16.840.1.113883.6.121	Chagatai
chk	2.16.840.1.113883.6.121	Chuukese
chm	2.16.840.1.113883.6.121	Mari
chn	2.16.840.1.113883.6.121	Chinook jargon
cho	2.16.840.1.113883.6.121	Choctaw
chp	2.16.840.1.113883.6.121	Chipewyan; Dene Suline
chr	2.16.840.1.113883.6.121	Cherokee
chy	2.16.840.1.113883.6.121	Cheyenne
cmc	2.16.840.1.113883.6.121	Chamic languages
cop	2.16.840.1.113883.6.121	Coptic
cpe	2.16.840.1.113883.6.121	Creoles and pidgins, English based (Other)
cpf	2.16.840.1.113883.6.121	Creoles and pidgins, French-based (Other)
cpp	2.16.840.1.113883.6.121	Creoles and pidgins, Portuguese-based (Other)
crh	2.16.840.1.113883.6.121	Crimean Tatar; Crimean Turkish
crp	2.16.840.1.113883.6.121	Creoles and pidgins (Other)
csb	2.16.840.1.113883.6.121	Kashubian
cus	2.16.840.1.113883.6.121	Cushitic (Other)
dak	2.16.840.1.113883.6.121	Dakota
dar	2.16.840.1.113883.6.121	Dargwa
day	2.16.840.1.113883.6.121	Land Dayak languages
del	2.16.840.1.113883.6.121	Delaware
den	2.16.840.1.113883.6.121	Slave (Athapascan)
dgr	2.16.840.1.113883.6.121	Dogrib

din	2.16.840.1.113883.6.121	Dinka
doi	2.16.840.1.113883.6.121	Dogri
dra	2.16.840.1.113883.6.121	Dravidian (Other)
dsb	2.16.840.1.113883.6.121	Lower Sorbian
dua	2.16.840.1.113883.6.121	Duala
dum	2.16.840.1.113883.6.121	Dutch, Middle (ca.1050-1350)
dyu	2.16.840.1.113883.6.121	Dyula
efi	2.16.840.1.113883.6.121	Efik
egy	2.16.840.1.113883.6.121	Egyptian (Ancient)
eka	2.16.840.1.113883.6.121	Ekajuk
elx	2.16.840.1.113883.6.121	Elamite
enm	2.16.840.1.113883.6.121	English, Middle (1100-1500)
ewo	2.16.840.1.113883.6.121	Ewondo
fan	2.16.840.1.113883.6.121	Fang
fat	2.16.840.1.113883.6.121	Fanti
fil	2.16.840.1.113883.6.121	Filipino; Pilipino
fiu	2.16.840.1.113883.6.121	Finno-Ugrian (Other)
fon	2.16.840.1.113883.6.121	Fon
frm	2.16.840.1.113883.6.121	French, Middle (ca.1400-1600)
fro	2.16.840.1.113883.6.121	French, Old (842-ca.1400)
frr	2.16.840.1.113883.6.121	Northern Frisian
frs	2.16.840.1.113883.6.121	Eastern Frisian
fur	2.16.840.1.113883.6.121	Friulian
gaa	2.16.840.1.113883.6.121	Ga
gay	2.16.840.1.113883.6.121	Gayo
gba	2.16.840.1.113883.6.121	Gbaya
gem	2.16.840.1.113883.6.121	Germanic (Other)
gez	2.16.840.1.113883.6.121	Geez
gil	2.16.840.1.113883.6.121	Gilbertese
gmh	2.16.840.1.113883.6.121	German, Middle High (ca.1050-1500)
goh	2.16.840.1.113883.6.121	German, Old High (ca.750-1050)
gon	2.16.840.1.113883.6.121	Gondi
gor	2.16.840.1.113883.6.121	Gorontalo
got	2.16.840.1.113883.6.121	Gothic
grb	2.16.840.1.113883.6.121	Grebo
grc	2.16.840.1.113883.6.121	Greek, Ancient (to 1453)
gsw	2.16.840.1.113883.6.121	Swiss German; Alemannic
gwi	2.16.840.1.113883.6.121	Gwich'in
hai	2.16.840.1.113883.6.121	Haida
haw	2.16.840.1.113883.6.121	Hawaiian
hil	2.16.840.1.113883.6.121	Hiligaynon
him	2.16.840.1.113883.6.121	Himachali
hit	2.16.840.1.113883.6.121	Hittite

hmn	2.16.840.1.113883.6.121	Hmong
hsb	2.16.840.1.113883.6.121	Upper Sorbian
hup	2.16.840.1.113883.6.121	Hupa
iba	2.16.840.1.113883.6.121	Iban
ijo	2.16.840.1.113883.6.121	Ijo languages
ilo	2.16.840.1.113883.6.121	Iloko
inc	2.16.840.1.113883.6.121	Indic (Other)
ine	2.16.840.1.113883.6.121	Indo-European (Other)
inh	2.16.840.1.113883.6.121	Ingush
ira	2.16.840.1.113883.6.121	Iranian (Other)
iro	2.16.840.1.113883.6.121	Iroquoian languages
jbo	2.16.840.1.113883.6.121	Lojban
jpr	2.16.840.1.113883.6.121	Judeo-Persian
jrb	2.16.840.1.113883.6.121	Judeo-Arabic
kaa	2.16.840.1.113883.6.121	Kara-Kalpak
kab	2.16.840.1.113883.6.121	Kabyle
kac	2.16.840.1.113883.6.121	Kachin; Jingpho
kam	2.16.840.1.113883.6.121	Kamba
kar	2.16.840.1.113883.6.121	Karen languages
kaw	2.16.840.1.113883.6.121	Kawi
kbd	2.16.840.1.113883.6.121	Kabardian
kha	2.16.840.1.113883.6.121	Khasi
khi	2.16.840.1.113883.6.121	Khoisan (Other)
kho	2.16.840.1.113883.6.121	Khotanese
kmb	2.16.840.1.113883.6.121	Kimbundu
kok	2.16.840.1.113883.6.121	Konkani
kos	2.16.840.1.113883.6.121	Kosraean
kpe	2.16.840.1.113883.6.121	Kpelle
krc	2.16.840.1.113883.6.121	Karachay-Balkar
krl	2.16.840.1.113883.6.121	Karelian
kro	2.16.840.1.113883.6.121	Kru languages
kru	2.16.840.1.113883.6.121	Kurukh
kum	2.16.840.1.113883.6.121	Kumyk
kut	2.16.840.1.113883.6.121	Kutenai
lad	2.16.840.1.113883.6.121	Ladino
lah	2.16.840.1.113883.6.121	Lahnda
lam	2.16.840.1.113883.6.121	Lamba
lez	2.16.840.1.113883.6.121	Lezghian
lol	2.16.840.1.113883.6.121	Mongo
loz	2.16.840.1.113883.6.121	Lozi
lua	2.16.840.1.113883.6.121	Luba-Lulua
lui	2.16.840.1.113883.6.121	Luiseno
lun	2.16.840.1.113883.6.121	Lunda

luo	2.16.840.1.113883.6.121	Luo (Kenya and Tanzania)
lus	2.16.840.1.113883.6.121	Lushai
mad	2.16.840.1.113883.6.121	Madurese
mag	2.16.840.1.113883.6.121	Magahi
mai	2.16.840.1.113883.6.121	Maithili
mak	2.16.840.1.113883.6.121	Makasar
man	2.16.840.1.113883.6.121	Mandingo
map	2.16.840.1.113883.6.121	Austronesian (Other)
mas	2.16.840.1.113883.6.121	Masai
mdf	2.16.840.1.113883.6.121	Moksha
mdr	2.16.840.1.113883.6.121	Mandar
men	2.16.840.1.113883.6.121	Mende
mga	2.16.840.1.113883.6.121	Irish, Middle (900-1200)
mic	2.16.840.1.113883.6.121	Mi'kmaq; Micmac
min	2.16.840.1.113883.6.121	Minangkabau
mis	2.16.840.1.113883.6.121	Uncoded languages
mkh	2.16.840.1.113883.6.121	Mon-Khmer (Other)
mnc	2.16.840.1.113883.6.121	Manchu
mni	2.16.840.1.113883.6.121	Manipuri
mno	2.16.840.1.113883.6.121	Manobo languages
moh	2.16.840.1.113883.6.121	Mohawk
mos	2.16.840.1.113883.6.121	Mossi
mul	2.16.840.1.113883.6.121	Multiple languages
mun	2.16.840.1.113883.6.121	Munda languages
mus	2.16.840.1.113883.6.121	Creek
mwl	2.16.840.1.113883.6.121	Mirandese
mwr	2.16.840.1.113883.6.121	Marwari
myn	2.16.840.1.113883.6.121	Mayan languages
myv	2.16.840.1.113883.6.121	Erzya
nah	2.16.840.1.113883.6.121	Nahuatl languages
nai	2.16.840.1.113883.6.121	North American Indian
nap	2.16.840.1.113883.6.121	Neapolitan
nds	2.16.840.1.113883.6.121	Low German; Low Saxon; German, Low; Saxon, Low
new	2.16.840.1.113883.6.121	Nepal Bhasa; Newari
nia	2.16.840.1.113883.6.121	Nias
nic	2.16.840.1.113883.6.121	Niger-Kordofanian (Other)
niu	2.16.840.1.113883.6.121	Niuean
nog	2.16.840.1.113883.6.121	Nogai
non	2.16.840.1.113883.6.121	Norse, Old
nqo	2.16.840.1.113883.6.121	N'Ko
nso	2.16.840.1.113883.6.121	Pedi; Sepedi; Northern Sotho
nub	2.16.840.1.113883.6.121	Nubian languages
nwc	2.16.840.1.113883.6.121	Classical Newari; Old Newari; Classical Nepal Bhasa

nym	2.16.840.1.113883.6.121	Nyamwezi
nyn	2.16.840.1.113883.6.121	Nyankole
nyo	2.16.840.1.113883.6.121	Nyoro
nzi	2.16.840.1.113883.6.121	Nzima
osa	2.16.840.1.113883.6.121	Osage
ota	2.16.840.1.113883.6.121	Turkish, Ottoman (1500-1928)
oto	2.16.840.1.113883.6.121	Otomian languages
paa	2.16.840.1.113883.6.121	Papuan (Other)
pag	2.16.840.1.113883.6.121	Pangasinan
pal	2.16.840.1.113883.6.121	Pahlavi
pam	2.16.840.1.113883.6.121	Pampanga; Kapampangan
pap	2.16.840.1.113883.6.121	Papiamento
pau	2.16.840.1.113883.6.121	Palauan
peo	2.16.840.1.113883.6.121	Persian, Old (ca.600-400 B.C.)
phi	2.16.840.1.113883.6.121	Philippine (Other)
phn	2.16.840.1.113883.6.121	Phoenician
pon	2.16.840.1.113883.6.121	Pohnpeian
pra	2.16.840.1.113883.6.121	Prakrit languages
pro	2.16.840.1.113883.6.121	ProvenÃ§al, Old (to 1500)
qaa-qtz	2.16.840.1.113883.6.121	Reserved for local use
raj	2.16.840.1.113883.6.121	Rajasthani
rap	2.16.840.1.113883.6.121	Rapanui
rar	2.16.840.1.113883.6.121	Rarotongan; Cook Islands Maori
roa	2.16.840.1.113883.6.121	Romance (Other)
rom	2.16.840.1.113883.6.121	Romany
rup	2.16.840.1.113883.6.121	Aromanian; Arumanian; Macedo-Romanian
sad	2.16.840.1.113883.6.121	Sandawe
sah	2.16.840.1.113883.6.121	Yakut
sai	2.16.840.1.113883.6.121	South American Indian (Other)
sal	2.16.840.1.113883.6.121	Salishan languages
sam	2.16.840.1.113883.6.121	Samaritan Aramaic
sas	2.16.840.1.113883.6.121	Sasak
sat	2.16.840.1.113883.6.121	Santali
scn	2.16.840.1.113883.6.121	Sicilian
sco	2.16.840.1.113883.6.121	Scots
sel	2.16.840.1.113883.6.121	Selkup
sem	2.16.840.1.113883.6.121	Semitic (Other)
sga	2.16.840.1.113883.6.121	Irish, Old (to 900)
sgn	2.16.840.1.113883.6.121	Sign Languages
shn	2.16.840.1.113883.6.121	Shan
sid	2.16.840.1.113883.6.121	Sidamo
sio	2.16.840.1.113883.6.121	Siouan languages
sit	2.16.840.1.113883.6.121	Sino-Tibetan (Other)

sla	2.16.840.1.113883.6.121	Slavic (Other)
sma	2.16.840.1.113883.6.121	Southern Sami
smi	2.16.840.1.113883.6.121	Sami languages (Other)
smj	2.16.840.1.113883.6.121	Lule Sami
smn	2.16.840.1.113883.6.121	Inari Sami
sms	2.16.840.1.113883.6.121	Skolt Sami
snk	2.16.840.1.113883.6.121	Soninke
sog	2.16.840.1.113883.6.121	Sogdian
son	2.16.840.1.113883.6.121	Songhai languages
srn	2.16.840.1.113883.6.121	Sranan Tongo
srr	2.16.840.1.113883.6.121	Serer
ssa	2.16.840.1.113883.6.121	Nilo-Saharan (Other)
suk	2.16.840.1.113883.6.121	Sukuma
sus	2.16.840.1.113883.6.121	Susu
sux	2.16.840.1.113883.6.121	Sumerian
syc	2.16.840.1.113883.6.121	Classical Syriac
syr	2.16.840.1.113883.6.121	Syriac
tai	2.16.840.1.113883.6.121	Tai (Other)
tem	2.16.840.1.113883.6.121	Timne
ter	2.16.840.1.113883.6.121	Tereno
tet	2.16.840.1.113883.6.121	Tetum
tig	2.16.840.1.113883.6.121	Tigre
tiv	2.16.840.1.113883.6.121	Tiv
tkl	2.16.840.1.113883.6.121	Tokelau
tlh	2.16.840.1.113883.6.121	Klingon; tlhIngan-Hol
tli	2.16.840.1.113883.6.121	Tlingit
tmh	2.16.840.1.113883.6.121	Tamashek
tog	2.16.840.1.113883.6.121	Tonga (Nyasa)
tpi	2.16.840.1.113883.6.121	Tok Pisin
tsi	2.16.840.1.113883.6.121	Tsimshian
tum	2.16.840.1.113883.6.121	Tumbuka
tup	2.16.840.1.113883.6.121	Tupi languages
tut	2.16.840.1.113883.6.121	Altaic (Other)
tvl	2.16.840.1.113883.6.121	Tuvalu
tyv	2.16.840.1.113883.6.121	Tuvinian
udm	2.16.840.1.113883.6.121	Udmurt
uga	2.16.840.1.113883.6.121	Ugaritic
umb	2.16.840.1.113883.6.121	Umbundu
und	2.16.840.1.113883.6.121	Undetermined
vai	2.16.840.1.113883.6.121	Vai
vot	2.16.840.1.113883.6.121	Votic
wak	2.16.840.1.113883.6.121	Wakashan languages
wal	2.16.840.1.113883.6.121	Walamo

war	2.16.840.1.113883.6.121	Waray
was	2.16.840.1.113883.6.121	Washo
wen	2.16.840.1.113883.6.121	Sorbian languages
xal	2.16.840.1.113883.6.121	Kalmyk; Oirat
yao	2.16.840.1.113883.6.121	Yao
yap	2.16.840.1.113883.6.121	Yapese
ypk	2.16.840.1.113883.6.121	Yupik languages
zap	2.16.840.1.113883.6.121	Zapotec
zbl	2.16.840.1.113883.6.121	Blissymbols; Blissymbolics; Bliss
zen	2.16.840.1.113883.6.121	Zenaga
znd	2.16.840.1.113883.6.121	Zande languages
zun	2.16.840.1.113883.6.121	Zuni
zxx	2.16.840.1.113883.6.121	No linguistic content
zza	2.16.840.1.113883.6.121	Zaza; Dimili; Dimli; Kirdki; Kirmanjki; Zazaki

Contact Type

Value Set Name:	ContactType
Value Set OID:	2.16.840.1.113883.3.88.12.3221.3.2
Value Set Author:	HITSP
Value Set Version:	20071213
Base Code Set(s):	HL7 Role Class

Code	CodeSet OID	Description
AGNT	2.16.840.1.113883.5.110	Agent
CAREGIVER	2.16.840.1.113883.5.110	Caregiver
ECON	2.16.840.1.113883.5.110	Emergency Contact
GUARD	2.16.840.1.113883.5.110	Guardian
NOK	2.16.840.1.113883.5.110	Next of kin
PRS	2.16.840.1.113883.5.110	personal

Family History

Value Set Name:	FamilyHistoryRelatedSubjectCode
Value Set OID:	2.16.840.1.113883.1.11.19579
Value Set Author:	HL7
Value Set Version:	20080101
Base Code Set(s):	HL7 Role Code

Code	CodeSet OID	Description
FAMMEMB	2.16.840.1.113883.5.111	Family Member

CHILD	2.16.840.1.113883.5.111	Child
CHLDADOPT	2.16.840.1.113883.5.111	adopted child
DAUADOPT	2.16.840.1.113883.5.111	adopted daughter
SONADOPT	2.16.840.1.113883.5.111	adopted son
CHLDINLAW	2.16.840.1.113883.5.111	child in-law
DAUINLAW	2.16.840.1.113883.5.111	daughter in-law
SONINLAW	2.16.840.1.113883.5.111	son in-law
CHLDFOST	2.16.840.1.113883.5.111	foster child
DAUFOST	2.16.840.1.113883.5.111	foster daughter
SONFOST	2.16.840.1.113883.5.111	foster son
NCHILD	2.16.840.1.113883.5.111	natural child
DAU	2.16.840.1.113883.5.111	natural daughter
SON	2.16.840.1.113883.5.111	natural son
STPCHLD	2.16.840.1.113883.5.111	step child
STPDAU	2.16.840.1.113883.5.111	stepdaughter
STPSON	2.16.840.1.113883.5.111	stepson
AUNT	2.16.840.1.113883.5.111	aunt
MAUNT	2.16.840.1.113883.5.111	MaternalAunt
PAUNT	2.16.840.1.113883.5.111	PaternalAunt
COUSN	2.16.840.1.113883.5.111	cousin
MCOUSN	2.16.840.1.113883.5.111	MaternalCousin
PCOUSN	2.16.840.1.113883.5.111	PaternalCousin
UNCLE	2.16.840.1.113883.5.111	uncle
MUNCLE	2.16.840.1.113883.5.111	MaternalUncle
PUNCLE	2.16.840.1.113883.5.111	PaternalUncle
GRNDCHILD	2.16.840.1.113883.5.111	grandchild
GRNDDAU	2.16.840.1.113883.5.111	granddaughter
GRNDSON	2.16.840.1.113883.5.111	grandson
GRPRN	2.16.840.1.113883.5.111	Grandparent
GRFTH	2.16.840.1.113883.5.111	Grandfather
GRMTH	2.16.840.1.113883.5.111	Grandmother
MGRFTH	2.16.840.1.113883.5.111	MaternalGrandfather
MGRMTH	2.16.840.1.113883.5.111	MaternalGrandmother
MGRPRN	2.16.840.1.113883.5.111	MaternalGrandparent
PGRFTH	2.16.840.1.113883.5.111	PaternalGrandfather
PGRMTH	2.16.840.1.113883.5.111	PaternalGrandmother
PGRPRN	2.16.840.1.113883.5.111	PaternalGrandparent
GGRPRN	2.16.840.1.113883.5.111	great grandparent
MGGRFTH	2.16.840.1.113883.5.111	MaternalGreatgrandfather
MGGRMTH	2.16.840.1.113883.5.111	MaternalGreatgrandmother
MGGRPRN	2.16.840.1.113883.5.111	MaternalGreatgrandparent
PGGRFTH	2.16.840.1.113883.5.111	PaternalGreatgrandfather
PGGRMTH	2.16.840.1.113883.5.111	PaternalGreatgrandmother

PGGRPRN	2.16.840.1.113883.5.111	PaternalGreatgrandparent
GGRFTH	2.16.840.1.113883.5.111	great grandfather
GGRMTH	2.16.840.1.113883.5.111	great grandmother
NIENEPH	2.16.840.1.113883.5.111	niece/nephew
NEPHEW	2.16.840.1.113883.5.111	nephew
NIECE	2.16.840.1.113883.5.111	niece
PRN	2.16.840.1.113883.5.111	Parent
FTH	2.16.840.1.113883.5.111	Father
MTH	2.16.840.1.113883.5.111	Mother
NPRN	2.16.840.1.113883.5.111	natural parent
NFTH	2.16.840.1.113883.5.111	natural father
NFTHF	2.16.840.1.113883.5.111	natural father of fetus
NMTH	2.16.840.1.113883.5.111	natural mother
PRNINLAW	2.16.840.1.113883.5.111	parent in-law
FTHINLAW	2.16.840.1.113883.5.111	father-in-law
MTHINLAW	2.16.840.1.113883.5.111	mother-in-law
STPPRN	2.16.840.1.113883.5.111	step parent
STPFTH	2.16.840.1.113883.5.111	stepfather
STPMTH	2.16.840.1.113883.5.111	stepmother
ROOM	2.16.840.1.113883.5.111	Roomate
SIB	2.16.840.1.113883.5.111	Sibling
BRO	2.16.840.1.113883.5.111	Brother
HSIB	2.16.840.1.113883.5.111	half-sibling
HBRO	2.16.840.1.113883.5.111	half-brother
HSIS	2.16.840.1.113883.5.111	half-sister
NSIB	2.16.840.1.113883.5.111	natural sibling
NBRO	2.16.840.1.113883.5.111	natural brother
NSIS	2.16.840.1.113883.5.111	natural sister
SIBINLAW	2.16.840.1.113883.5.111	sibling in-law
BROINLAW	2.16.840.1.113883.5.111	brother-in-law
SISINLAW	2.16.840.1.113883.5.111	sister-in-law
SIS	2.16.840.1.113883.5.111	Sister
STPSIB	2.16.840.1.113883.5.111	step sibling
STPBRO	2.16.840.1.113883.5.111	stepbrother
STPSIS	2.16.840.1.113883.5.111	stepsister
SIGOTHR	2.16.840.1.113883.5.111	significant other
SPS	2.16.840.1.113883.5.111	spouse
HUSB	2.16.840.1.113883.5.111	husband
WIFE	2.16.840.1.113883.5.111	wife
DOMPART	2.16.840.1.113883.5.111	domestic partner
NBOR	2.16.840.1.113883.5.111	neighbor
FRND	2.16.840.1.113883.5.111	unrelated friend

Provider Role

Value Set Name:	ProviderRole
Value Set OID:	2.16.840.1.113883.3.88.12.3221.4.2
Value Set Author:	HITSP
Value Set Version:	20071213
Base Code Set(s):	HL7 Provider Role

Code	CodeSet OID	Description
CP	2.16.840.1.113883.12.443	Consulting Provider
PP	2.16.840.1.113883.12.443	Primary Care Provider
RP	2.16.840.1.113883.12.443	Referring Provider

Provider Type

Value Set Name:	Provider Type
Value Set OID:	2.16.840.1.113883.3.88.12.3221.4.4
Value Set Author:	HITSP
Value Set Version:	20071213
Base Code Set(s):	National Uniform Claim Committee Provider Codes

Code	CodeSet OID	Description
100000000X	2.16.840.1.113883.6.101	Behavioral Health and Social Service Providers
110000000X	2.16.840.1.113883.6.101	Chiropractic Providers
120000000X	2.16.840.1.113883.6.101	Dental Providers
130000000X	2.16.840.1.113883.6.101	Dietary and Nutritional Service Providers
140000000X	2.16.840.1.113883.6.101	Emergency Medical Service Providers
150000000X	2.16.840.1.113883.6.101	Eye and Vision Service Providers
160000000X	2.16.840.1.113883.6.101	Nursing Service Providers
180000000X	2.16.840.1.113883.6.101	Pharmacy Service Providers (Individuals)
200000000X	2.16.840.1.113883.6.101	Allopathic & Osteopathic Physicians
210000000X	2.16.840.1.113883.6.101	Podiatric Medicine and Surgery Providers
220000000X	2.16.840.1.113883.6.101	Respiratory, Rehabilitative and Restorative Service Providers
230000000X	2.16.840.1.113883.6.101	Speech, Language and Hearing Providers
250000000X	2.16.840.1.113883.6.101	Agencies
260000000X	2.16.840.1.113883.6.101	Ambulatory Health Care Facilities
280000000X	2.16.840.1.113883.6.101	Hospitals
290000000X	2.16.840.1.113883.6.101	Laboratories
300000000X	2.16.840.1.113883.6.101	Managed Care Organizations
310000000X	2.16.840.1.113883.6.101	Nursing and Custodial Care Facilities

320000000X	2.16.840.1.113883.6.101	Residential Treatment Facilities
330000000X	2.16.840.1.113883.6.101	Suppliers (including Pharmacies and Durable Medical Equipment)
360000000X	2.16.840.1.113883.6.101	Physician Assistants and Advanced Practice Nursing Providers
370000000X	2.16.840.1.113883.6.101	Nursing Service Related Providers
380000000X	2.16.840.1.113883.6.101	Respite Care Facility

Problem Status

Value Set Name:	ProblemStatus
Value Set OID:	2.16.840.1.113883.3.18.6.1.11
Value Set Author:	HL7
Value Set Version:	20080331

Base Code Set(s): SNOMED CT

Code	CodeSet OID	Description
55561003	2.16.840.1.113883.6.96	Active
73425007	2.16.840.1.113883.6.96	Inactive
90734009	2.16.840.1.113883.6.96	Chronic
7087005	2.16.840.1.113883.6.96	Intermittent
255227004	2.16.840.1.113883.6.96	Recurrent
415684004	2.16.840.1.113883.6.96	Rule out
410516002	2.16.840.1.113883.6.96	Ruled out
413322009	2.16.840.1.113883.6.96	Resolved
52870002	2.16.840.1.113883.6.96	Admitting diagnosis
5605004	2.16.840.1.113883.6.96	Autopsy diagnosis
39154008	2.16.840.1.113883.6.96	Clinical diagnosis
24508002	2.16.840.1.113883.6.96	Cytology diagnosis
16100001	2.16.840.1.113883.6.96	Death diagnosis
47965005	2.16.840.1.113883.6.96	Differential diagnosis
14657009	2.16.840.1.113883.6.96	Established diagnosis
89100005	2.16.840.1.113883.6.96	Final diagnosis (discharge)
46159000	2.16.840.1.113883.6.96	Laboratory diagnosis
103330002	2.16.840.1.113883.6.96	No diagnosis
416400009	2.16.840.1.113883.6.96	Palpatory diagnosis
88101002	2.16.840.1.113883.6.96	Pathology diagnosis
406521002	2.16.840.1.113883.6.96	Post-op diagnosis
406520001	2.16.840.1.113883.6.96	Pre-op diagnosis

148006	2.16.840.1.113883.6.96	Preliminary diagnosis
8319008	2.16.840.1.113883.6.96	Principle diagnosis
48318009	2.16.840.1.113883.6.96	Prior diagnosis
406523004	2.16.840.1.113883.6.96	Referral diagnosis
15874002	2.16.840.1.113883.6.96	Revised diagnosis
85097005	2.16.840.1.113883.6.96	Secondary diagnosis
416932001	2.16.840.1.113883.6.96	Segmental diagnosis
406525006	2.16.840.1.113883.6.96	Suggested billing diagnosis
406522009	2.16.840.1.113883.6.96	Transfer diagnosis
5558000	2.16.840.1.113883.6.96	Working diagnosis
25163005	2.16.840.1.113883.6.96	X-ray diagnosis

Problem Status

Value Set Name:	ProblemStatus
Value Set OID:	2.16.840.1.113883.3.18.6.1.11
Value Set Author:	HL7
Value Set Version:	20080331

Base Code Set(s): SNOMED CT

Code	CodeSet OID	Description
55561003	2.16.840.1.113883.6.96	Active
73425007	2.16.840.1.113883.6.96	Inactive
90734009	2.16.840.1.113883.6.96	Chronic
7087005	2.16.840.1.113883.6.96	Intermittent
255227004	2.16.840.1.113883.6.96	Recurrent
415684004	2.16.840.1.113883.6.96	Rule out
410516002	2.16.840.1.113883.6.96	Ruled out
413322009	2.16.840.1.113883.6.96	Resolved
52870002	2.16.840.1.113883.6.96	Admitting diagnosis
5605004	2.16.840.1.113883.6.96	Autopsy diagnosis
39154008	2.16.840.1.113883.6.96	Clinical diagnosis
24508002	2.16.840.1.113883.6.96	Cytology diagnosis
16100001	2.16.840.1.113883.6.96	Death diagnosis
47965005	2.16.840.1.113883.6.96	Differential diagnosis
14657009	2.16.840.1.113883.6.96	Established diagnosis
89100005	2.16.840.1.113883.6.96	Final diagnosis (discharge)
46159000	2.16.840.1.113883.6.96	Laboratory diagnosis

103330002	2.16.840.1.113883.6.96	No diagnosis
416400009	2.16.840.1.113883.6.96	Palpatory diagnosis
88101002	2.16.840.1.113883.6.96	Pathology diagnosis
406521002	2.16.840.1.113883.6.96	Post-op diagnosis
406520001	2.16.840.1.113883.6.96	Pre-op diagnosis
148006	2.16.840.1.113883.6.96	Preliminary diagnosis
8319008	2.16.840.1.113883.6.96	Principle diagnosis
48318009	2.16.840.1.113883.6.96	Prior diagnosis
406523004	2.16.840.1.113883.6.96	Referral diagnosis
15874002	2.16.840.1.113883.6.96	Revised diagnosis
85097005	2.16.840.1.113883.6.96	Secondary diagnosis
416932001	2.16.840.1.113883.6.96	Segmental diagnosis
406525006	2.16.840.1.113883.6.96	Suggested billing diagnosis
406522009	2.16.840.1.113883.6.96	Transfer diagnosis
5558000	2.16.840.1.113883.6.96	Working diagnosis
25163005	2.16.840.1.113883.6.96	X-ray diagnosis

Problem Type

Value Set Name:	ProblemType
Value Set OID:	2.16.840.1.113883.3.88.12.3221.7.2
Value Set Author:	HITSP
Value Set Version:	20071213
Base Code Set(s):	SNOMED CT

Code	CodeSet OID	Description
404684003	2.16.840.1.113883.6.96	Finding
418799008	2.16.840.1.113883.6.96	Symptom
55607006	2.16.840.1.113883.6.96	Problem
409586006	2.16.840.1.113883.6.96	Complaint
64572001	2.16.840.1.113883.6.96	Condition
282291009	2.16.840.1.113883.6.96	Diagnosis
248536006	2.16.840.1.113883.6.96	Functional limitation

Type of Medication

Value Set Name:	TypeOfMedication
Value Set OID:	2.16.840.1.113883.3.88.12.3221.8.19
Value Set Author:	HITSP
Value Set Version:	20071213
Base Code Set(s):	SNOMED CT

Code	CodeSet OID	Description
329505003	2.16.840.1.113883.6.96	Over the counter products
73639000	2.16.840.1.113883.6.96	Prescription Drug

Advance Directive Type Code

Value Set Name:	AdvanceDirectiveTypeCode
Value Set OID:	2.16.840.1.113883.1.11.20.2
Value Set Author:	HL7
Value Set Version:	20061017
Base Code Set(s):	SNOMED CT

Code	CodeSet OID	Description
304251008	2.16.840.1.113883.6.96	Resuscitation
52765003	2.16.840.1.113883.6.96	Intubation
225204009	2.16.840.1.113883.6.96	IV Fluid and Support
89666000	2.16.840.1.113883.6.96	CPR
281789004	2.16.840.1.113883.6.96	Antibiotics
78823007	2.16.840.1.113883.6.96	Life Support
61420007	2.16.840.1.113883.6.96	Tube Feedings
71388002	2.16.840.1.113883.6.96	Other Directive

Advance Directive Status Code

Value Set Name:	AdvanceDirectiveStatusCode
Value Set OID:	2.16.840.1.113883.1.11.20.1
Value Set Author:	HL7
Value Set Version:	20061017
Base Code Set(s):	SNOMED CT

Code	CodeSet OID	Description
425392003	2.16.840.1.113883.6.96	Current and Verified
425394002	2.16.840.1.113883.6.96	Supported By Healthcare Will
425393008	2.16.840.1.113883.6.96	Supported By Durable Power of Attorney for Healthcare
425396000	2.16.840.1.113883.6.96	Verified With Family Only
310305009	2.16.840.1.113883.6.96	Verified By Medical Record Only

Vital Signs

Value Set Name:	VitalSigns
Value Set OID:	2.16.840.1.113883.3.88.12.3221.15.3.103
Value Set Author:	HITSP
Value Set Version:	20071213
Base Code Set(s):	LOINC

Code	CodeSet OID	Description
9279-1	2.16.840.1.113883.6.1	RESPIRATION RATE
8867-4	2.16.840.1.113883.6.1	HEART BEAT
2710-2	2.16.840.1.113883.6.1	OXYGEN SATURATION
8480-6	2.16.840.1.113883.6.1	INTRAVASCULAR SYSTOLIC
8462-4	2.16.840.1.113883.6.1	INTRAVASCULAR DIASTOLIC
8310-5	2.16.840.1.113883.6.1	BODY TEMPERATURE
8302-2	2.16.840.1.113883.6.1	BODY HEIGHT (MEASURED)
8306-3	2.16.840.1.113883.6.1	BODY HEIGHT^LYING
8287-5	2.16.840.1.113883.6.1	CIRCUMFRENCE.OCCIPITAL-FRONTAL (TAPE MEASURE)
3141-9	2.16.840.1.113883.6.1	BODY WEIGHT (MEASURED)

Medicaiton Status

Value Set Name:	MedicationStatusCode
Value Set OID:	2.16.840.1.113883.1.11.20.7
Value Set Author:	HL7
Value Set Version:	20061017
Base Code Set(s):	SNOMED CT

Code	CodeSet OID	Description
55561003	2.16.840.1.113883.6.96	Active
421139008	2.16.840.1.113883.6.96	On Hold
392521001	2.16.840.1.113883.6.96	Prior History
73425007	2.16.840.1.113883.6.96	No Longer Active

Allergy Status

Value Set Name:	AlertStatusCode
Value Set OID:	2.16.840.1.113883.1.11.20.3
Value Set Author:	HL7

Value Set Version: 20061017
Base Code Set(s): SNOMED CT

Code	CodeSet OID	Description
55561003	2.16.840.1.113883.6.96	Active
392521001	2.16.840.1.113883.6.96	Prior History
73425007	2.16.840.1.113883.6.96	No Longer Active

Procedure Status

Value Set Name: ProcedureStatusCode
Value Set OID: 2.16.840.1.113883.1.11.20.15
Value Set Author: HL7
Value Set Version: 20061017
Base Code Set(s): SNOMED CT

Code	CodeSet OID	Description
cancelled	2.16.840.1.113883.5.14	Cancelled
held	2.16.840.1.113883.5.14	On Hold
active	2.16.840.1.113883.5.14	In Progress
aborted	2.16.840.1.113883.5.14	Not Completed
completed	2.16.840.1.113883.5.14	Completed

Result Type Code

Value Set Name: ResultTypeCode
Value Set OID: 2.16.840.1.113883.1.11.20.16
Value Set Author: HL7
Value Set Version: 20061017

Base Code Set(s): SNOMED CT, LOINC, CPT-4

Code	CodeSet OID	Description
252275004	2.16.840.1.113883.6.96	Hematology

275711006	2.16.840.1.113883.6.96	Chemistry
68793005	2.16.840.1.113883.6.96	Serology
395124008	2.16.840.1.113883.6.96	Virology
69200006	2.16.840.1.113883.6.96	Toxicology
19851009	2.16.840.1.113883.6.96	Microbiology
363679005	2.16.840.1.113883.6.96	Imaging
363680008	2.16.840.1.113883.6.96	X-ray
16310003	2.16.840.1.113883.6.96	Ultrasound
77477000	2.16.840.1.113883.6.96	CT
113091000	2.16.840.1.113883.6.96	MRI
77343006	2.16.840.1.113883.6.96	Angiography
40701008	2.16.840.1.113883.6.96	Cardiac Echo
371572003	2.16.840.1.113883.6.96	Nuclear Medicine
108257001	2.16.840.1.113883.6.96	Pathology
71388002	2.16.840.1.113883.6.96	Procedure
46680005	2.16.840.1.113883.6.96	Vital Sign

Location of Care

Value Set Name:	ServiceDeliveryLocationRoleType
Value Set OID:	2.16.840.1.113883.1.11.17660
Value Set Author:	HL7
Value Set Version:	20080101
Base Code Set(s):	HL7 Role Type

Code	CodeSet OID	Description
261QP1100N	2.16.840.1.113883.5.111	Podiatry clinic
261QP2300N	2.16.840.1.113883.5.111	Primary care clinic
261QP3300N	2.16.840.1.113883.5.111	Pain clinic
261QS0112N	2.16.840.1.113883.5.111	Oral and maxillofacial surgery clinic
273R00000N	2.16.840.1.113883.5.111	Psychiatric hospital unit
273Y00000N	2.16.840.1.113883.5.111	Rehabilitation hospital unit
281PC2000N	2.16.840.1.113883.5.111	Hospitals; Chronic Disease Hospital; Children
282NC2000N	2.16.840.1.113883.5.111	Hospitals; General Acute Care Hospital; Children
282NR1301N	2.16.840.1.113883.5.111	Hospitals; General Acute Care Hospital; Rural
282NW0100N	2.16.840.1.113883.5.111	Hospitals; General Acute Care Hospital; Women
283XC2000N	2.16.840.1.113883.5.111	Hospitals; Rehabilitation Hospital; Children
2865C1500N	2.16.840.1.113883.5.111	Hospitals; Military Hospital; Community Health

2865M2000N	2.16.840.1.113883.5.111	Hospitals; Military Hospital; Medical Center
2865X1600N	2.16.840.1.113883.5.111	Hospitals; Military Hospital; Operational Component Facility
314000000N	2.16.840.1.113883.5.111	Skilled nursing facility
324500000N	2.16.840.1.113883.5.111	Substance use rehabilitation facility
ACC	2.16.840.1.113883.5.111	accident site
ALL	2.16.840.1.113883.5.111	Allergy clinic
AMB	2.16.840.1.113883.5.111	Ambulance
AMPUT	2.16.840.1.113883.5.111	Amputee clinic
BMTC	2.16.840.1.113883.5.111	Bone marrow transplant clinic
BMTU	2.16.840.1.113883.5.111	Bone marrow transplant unit
BREAST	2.16.840.1.113883.5.111	Breast clinic
CANC	2.16.840.1.113883.5.111	Child and adolescent neurology clinic
CAPC	2.16.840.1.113883.5.111	Child and adolescent psychiatry clinic
CARD	2.16.840.1.113883.5.111	Ambulatory Health Care Facilities; Clinic/Center; Rehabilitation: Cardiac Facilities
CATH	2.16.840.1.113883.5.111	Cardiac catheterization lab
CCU	2.16.840.1.113883.5.111	Coronary care unit
CHEST	2.16.840.1.113883.5.111	Chest unit
CHR	2.16.840.1.113883.5.111	Chronic Care Facility
COAG	2.16.840.1.113883.5.111	Coagulation clinic
COMM	2.16.840.1.113883.5.111	Community Location
CRS	2.16.840.1.113883.5.111	Colon and rectal surgery clinic
CVDX	2.16.840.1.113883.5.111	Cardiovascular diagnostics or therapeutics unit
DADDR	2.16.840.1.113883.5.111	Delivery Address
DERM	2.16.840.1.113883.5.111	Dermatology clinic
DX	2.16.840.1.113883.5.111	Diagnostics or therapeutics unit
ECHO	2.16.840.1.113883.5.111	Echocardiography lab
ENDO	2.16.840.1.113883.5.111	Endocrinology clinic
ENDOS	2.16.840.1.113883.5.111	Endoscopy lab
ENT	2.16.840.1.113883.5.111	Otorhinolaryngology clinic
EPIL	2.16.840.1.113883.5.111	Epilepsy unit
ER	2.16.840.1.113883.5.111	Emergency room
ETU	2.16.840.1.113883.5.111	Emergency trauma unit
FMC	2.16.840.1.113883.5.111	Family medicine clinic
GACH	2.16.840.1.113883.5.111	Hospitals; General Acute Care Hospital
GI	2.16.840.1.113883.5.111	Gastroenterology clinic
GIDX	2.16.840.1.113883.5.111	Gastroenterology diagnostics or therapeutics lab
GIM	2.16.840.1.113883.5.111	General internal medicine clinic
GYN	2.16.840.1.113883.5.111	Gynecology clinic
HAND	2.16.840.1.113883.5.111	Hand clinic

HD	2.16.840.1.113883.5.111	Hemodialysis unit
HEM	2.16.840.1.113883.5.111	Hematology clinic
HOSP	2.16.840.1.113883.5.111	Hospital
HTN	2.16.840.1.113883.5.111	Hypertension clinic
HU	2.16.840.1.113883.5.111	Hospital unit
ICU	2.16.840.1.113883.5.111	Intensive care unit
IEC	2.16.840.1.113883.5.111	Impairment evaluation center
INFD	2.16.840.1.113883.5.111	Infectious disease clinic
INV	2.16.840.1.113883.5.111	Infertility clinic
LYMPH	2.16.840.1.113883.5.111	Lympedema clinic
MGEN	2.16.840.1.113883.5.111	Medical genetics clinic
MHSP	2.16.840.1.113883.5.111	Military Hospital
MOBL	2.16.840.1.113883.5.111	Mobile Unit
NCCF	2.16.840.1.113883.5.111	Nursing or custodial care facility
NCCS	2.16.840.1.113883.5.111	Neurology critical care and stroke unit
NEPH	2.16.840.1.113883.5.111	Nephrology clinic
NEUR	2.16.840.1.113883.5.111	Neurology clinic
NS	2.16.840.1.113883.5.111	Neurosurgery unit
OB	2.16.840.1.113883.5.111	Obstetrics clinic
OF	2.16.840.1.113883.5.111	Outpatient facility
OMS	2.16.840.1.113883.5.111	Oral and maxillofacial surgery clinic
ONCL	2.16.840.1.113883.5.111	Medical oncology clinic
OPH	2.16.840.1.113883.5.111	Opthalmology clinic
ORTHO	2.16.840.1.113883.5.111	Orthopedics clinic
PAINCL	2.16.840.1.113883.5.111	Pain clinic
PC	2.16.840.1.113883.5.111	Primary care clinic
PEDC	2.16.840.1.113883.5.111	Pediatrics clinic
PEDCARD	2.16.840.1.113883.5.111	Pediatric cardiology clinic
PEDE	2.16.840.1.113883.5.111	Pediatric endocrinology clinic
PEDGI	2.16.840.1.113883.5.111	Pediatric gastroenterology clinic
PEDHEM	2.16.840.1.113883.5.111	Pediatric hematology clinic
PEDHO	2.16.840.1.113883.5.111	Pediatric oncology clinic
PEDICU	2.16.840.1.113883.5.111	Pediatric intensive care unit
PEDID	2.16.840.1.113883.5.111	Pediatric infectious disease clinic
PEDNEPH	2.16.840.1.113883.5.111	Pediatric nephrology clinic
PEDNICU	2.16.840.1.113883.5.111	Pediatric neonatal intensive care unit
PEDRHEUM	2.16.840.1.113883.5.111	Pediatric rheumatology clinic
PEDU	2.16.840.1.113883.5.111	Pediatric unit
PHARM	2.16.840.1.113883.5.111	Pharmacy
PHU	2.16.840.1.113883.5.111	Psychiatric hospital unit
PLS	2.16.840.1.113883.5.111	Plastic surgery clinic
POD	2.16.840.1.113883.5.111	Podiatry clinic
PRC	2.16.840.1.113883.5.111	Pain rehabilitation center

PREV	2.16.840.1.113883.5.111	Preventive medicine clinic
PROCTO	2.16.840.1.113883.5.111	Proctology clinic
PROFF	2.16.840.1.113883.5.111	Provider's Office
PROS	2.16.840.1.113883.5.111	Prosthodontics clinic
PSI	2.16.840.1.113883.5.111	Psychology clinic
PSY	2.16.840.1.113883.5.111	Psychiatry clinic
PSYCHF	2.16.840.1.113883.5.111	Psychatric Care Facility
PTRES	2.16.840.1.113883.5.111	Patient's Residence
RADDX	2.16.840.1.113883.5.111	Radiology diagnostics or therapeutics unit
RADO	2.16.840.1.113883.5.111	Radiation oncology unit
RH	2.16.840.1.113883.5.111	Rehabilitation hospital
RHEUM	2.16.840.1.113883.5.111	Rheumatology clinic
RHU	2.16.840.1.113883.5.111	Rehabilitation hospital unit
RNEU	2.16.840.1.113883.5.111	Neuroradiology unit
RTF	2.16.840.1.113883.5.111	Residential treatment facility
SCHOOL	2.16.840.1.113883.5.111	school
SLEEP	2.16.840.1.113883.5.111	Sleep disorders unit
SNF	2.16.840.1.113883.5.111	Skilled nursing facility
SPMED	2.16.840.1.113883.5.111	Sports medicine clinic
SU	2.16.840.1.113883.5.111	Surgery clinic
SURF	2.16.840.1.113883.5.111	Substance use rehabilitation facility
TR	2.16.840.1.113883.5.111	Transplant clinic
TRAVEL	2.16.840.1.113883.5.111	Travel and geographic medicine clinic
URO	2.16.840.1.113883.5.111	Urology clinic
WND	2.16.840.1.113883.5.111	Wound clinic
WORK	2.16.840.1.113883.5.111	work site

Documents Avaliblity Status

Value Set Name:	DocumentAvailabilityStatus
Value Set OID:	2.16.840.1.113883.3.18.6.1.9
Value Set Author:	TBD
Value Set Version:	
Base Code Set(s):	

Code	CodeSet OID
urn:oasis:names:tc:ebxml-regrep:StatusType:Submitted	n/a
urn:oasis:names:tc:ebxml-regrep:StatusType:Approved	n/a
urn:oasis:names:tc:ebxml-regrep:StatusType:Deprecated	n/a

Document Class

Value Set Name:	DocumentClass
Value Set OID:	2.16.840.1.113883.3.18.6.1.8
Value Set Author:	HL7
Value Set Version:	20080331
Base Code Set(s):	LOINC

Code	CodeSet OID	Description
34133-9	2.16.840.1.113883.6.1	SUMMARIZATION OF EPISODE NOTE
11502-2	2.16.840.1.113883.6.1	LABORATORY REPORT.TOTAL
34094-3	2.16.840.1.113883.6.1	Admission history and physical note:Hospital:Cardiology
34095-0	2.16.840.1.113883.6.1	Comprehensive history & physical note
34096-8	2.16.840.1.113883.6.1	Comprehensive history and physical:Nursing Home
34097-6	2.16.840.1.113883.6.1	Conference evaluation note:Nursing Home
34098-4	2.16.840.1.113883.6.1	Conference evaluation note
34099-2	2.16.840.1.113883.6.1	Consultation note::Cardiology
34100-8	2.16.840.1.113883.6.1	Consultation note:Critical Care Unit
34101-6	2.16.840.1.113883.6.1	Consultation note:Outpatient:General Medicine
34102-4	2.16.840.1.113883.6.1	Consultation note:Hospital:Psychiatry
34103-2	2.16.840.1.113883.6.1	Consultation note::Pulmonary
34104-0	2.16.840.1.113883.6.1	Consultation note:Hospital
34105-7	2.16.840.1.113883.6.1	Discharge summarization note:Hospital
34106-5	2.16.840.1.113883.6.1	Discharge summarization note:Hospital:Physican
34107-3	2.16.840.1.113883.6.1	Education procedure note:Home health
34108-1	2.16.840.1.113883.6.1	Evaluation and management note:Outpatient
34109-9	2.16.840.1.113883.6.1	Evaluation and management note
34110-7	2.16.840.1.113883.6.1	Evaluation and management note:Outpatient:Diabetology
34111-5	2.16.840.1.113883.6.1	Evaluation and management note:Emergency department
34112-3	2.16.840.1.113883.6.1	Evaluation and management note:Inpatient
34113-1	2.16.840.1.113883.6.1	Evaluation and management note:Nursing home
34114-9	2.16.840.1.113883.6.1	Group counseling note:Hospital
34115-6	2.16.840.1.113883.6.1	History & physical note:Hospital:Medical student
34116-4	2.16.840.1.113883.6.1	History & physical note:Nursing Home:Physician
34117-2	2.16.840.1.113883.6.1	History and physical note
34118-0	2.16.840.1.113883.6.1	Initial evaluation note:Home health
34119-8	2.16.840.1.113883.6.1	Initial evaluation note:Nursing home
34120-6	2.16.840.1.113883.6.1	Initial evaluation note:Outpatient
34121-4	2.16.840.1.113883.6.1	Interventional procedure note
34122-2	2.16.840.1.113883.6.1	Pathology procedure note::Pathology

34123-0	2.16.840.1.113883.6.1	Pre-operative evaluation and management note:Hospital:Ane
34124-8	2.16.840.1.113883.6.1	Subsequent evaluation note:Outpatient:Cardiology
34125-5	2.16.840.1.113883.6.1	Subsequent evaluation note:Home health:Case manager
34126-3	2.16.840.1.113883.6.1	Subsequent evaluation note:Critical care unit
34127-1	2.16.840.1.113883.6.1	Subsequent evaluation note:Outpatient:Dental hygienist
34128-9	2.16.840.1.113883.6.1	Subsequent evaluation note:Outpatient:Dentistry
34129-7	2.16.840.1.113883.6.1	Subsequent evaluation note:Home health
34130-5	2.16.840.1.113883.6.1	Subsequent evaluation note:Hospital
34131-3	2.16.840.1.113883.6.1	Subsequent evaluation note:Outpatient
34132-1	2.16.840.1.113883.6.1	Subsequent evaluation note:Outpatient
34134-7	2.16.840.1.113883.6.1	Supervisory note:Outpatient:Attending physician
34135-4	2.16.840.1.113883.6.1	Supervisory note:Outpatient:Attending physician.cardiology
34136-2	2.16.840.1.113883.6.1	Supervisory note:Outpatient:Attending physician.gastroenter
34137-0	2.16.840.1.113883.6.1	Surgical operation note:Outpatient
34138-8	2.16.840.1.113883.6.1	Targeted history and physical note
34139-6	2.16.840.1.113883.6.1	Telephone encounter note::Nursing
34140-4	2.16.840.1.113883.6.1	Transfer of care referral note
34744-3	2.16.840.1.113883.6.1	Admission evaluation note::Nursing
34745-0	2.16.840.1.113883.6.1	Discharge summarization note::Nursing
34746-8	2.16.840.1.113883.6.1	Evaluation and management note::Nursing
34747-6	2.16.840.1.113883.6.1	Pre-operative evaluation and management note::Nursing
34748-4	2.16.840.1.113883.6.1	Telephone encounter note
34749-2	2.16.840.1.113883.6.1	Consultation note:Outpatient:Anesthesia
34750-0	2.16.840.1.113883.6.1	Evaluation and management note::Anesthesia
34751-8	2.16.840.1.113883.6.1	Pre-operative evaluation and management note::Anesthesia
34752-6	2.16.840.1.113883.6.1	Evaluation and management note::Cardiology
34753-4	2.16.840.1.113883.6.1	Evaluation and management note:Outpatient:Cardiology
34754-2	2.16.840.1.113883.6.1	Evaluation and management note::Critical care
34755-9	2.16.840.1.113883.6.1	Transfer summarization note::Critical care
34756-7	2.16.840.1.113883.6.1	Consultation note::Dentistry
34757-5	2.16.840.1.113883.6.1	Evaluation and management note::Dentistry
34758-3	2.16.840.1.113883.6.1	Consultation note::Dermatology
34759-1	2.16.840.1.113883.6.1	Evaluation and management note::Dermatology
34760-9	2.16.840.1.113883.6.1	Consultation note::Diabetology
34761-7	2.16.840.1.113883.6.1	Consultation note::Gastroenterology
34762-5	2.16.840.1.113883.6.1	Evaluation and management note::Gastroenterology
34763-3	2.16.840.1.113883.6.1	Admission history and physical note::General medicine
34764-1	2.16.840.1.113883.6.1	Consultation note::General medicine
34765-8	2.16.840.1.113883.6.1	Evaluation and management note::General medicine
34766-6	2.16.840.1.113883.6.1	Evaluation and management note:Outpatient:General medici
34767-4	2.16.840.1.113883.6.1	Evaluation and management note::Medical student.general m
34768-2	2.16.840.1.113883.6.1	Evaluation and management note::Nurse.general medicine
34769-0	2.16.840.1.113883.6.1	Evaluation and management note::Attending physician.gener

34770-8	2.16.840.1.113883.6.1	Transfer summarization note::General medicine
34771-6	2.16.840.1.113883.6.1	Consultation note::General surgery
34772-4	2.16.840.1.113883.6.1	Evaluation and management note::General surgery
34773-2	2.16.840.1.113883.6.1	Evaluation and management note::Attending physician.gener
34774-0	2.16.840.1.113883.6.1	History & physical note::General surgery
34775-7	2.16.840.1.113883.6.1	Pre-operative evaluation and management note::General surg
34776-5	2.16.840.1.113883.6.1	Consultation note::Gerontology
34777-3	2.16.840.1.113883.6.1	Consultation note::Gynecology
34778-1	2.16.840.1.113883.6.1	Evaluation and management note::Gynecology
34779-9	2.16.840.1.113883.6.1	Consultation note::Hematology+Oncology
34780-7	2.16.840.1.113883.6.1	Evaluation and management note::Hematology+Oncology
34781-5	2.16.840.1.113883.6.1	Consultation note::Infectious disease
34782-3	2.16.840.1.113883.6.1	Evaluation and management note::Infectious disease
34783-1	2.16.840.1.113883.6.1	Consultation note::Kinesiotherapy
34784-9	2.16.840.1.113883.6.1	Evaluation and management note::Kinesiotherapy
34785-6	2.16.840.1.113883.6.1	Consultation note::Mental health
34786-4	2.16.840.1.113883.6.1	Evaluation and management note::Mental health
34787-2	2.16.840.1.113883.6.1	Group counseling note::Mental health
34788-0	2.16.840.1.113883.6.1	Consultation note::Psychiatry
34789-8	2.16.840.1.113883.6.1	Evaluation and management note::Psychiatry
34790-6	2.16.840.1.113883.6.1	Group counseling note::Psychiatry
34791-4	2.16.840.1.113883.6.1	Consultation note::Psychology
34792-2	2.16.840.1.113883.6.1	Evaluation and management note::Psychology
34793-0	2.16.840.1.113883.6.1	Group counseling note::Psychology
34794-8	2.16.840.1.113883.6.1	Evaluation and management note::Multidisciplinary
34795-5	2.16.840.1.113883.6.1	Consultation note::Nephrology
34796-3	2.16.840.1.113883.6.1	Evaluation and management note::Nephrology
34797-1	2.16.840.1.113883.6.1	Consultation note::Neurology
34798-9	2.16.840.1.113883.6.1	Consultation note::Neurosurgery
34799-7	2.16.840.1.113883.6.1	Evaluation and management note::Neurosurgery
34800-3	2.16.840.1.113883.6.1	Consultation note::Nutrition+Dietetics
34801-1	2.16.840.1.113883.6.1	Evaluation and management note::Nutrition+Dietetics
34802-9	2.16.840.1.113883.6.1	Evaluation and management note::Occupational health
34803-7	2.16.840.1.113883.6.1	Consultation note::Occupational health
34804-5	2.16.840.1.113883.6.1	Evaluation and management note::Occupational therapy
34805-2	2.16.840.1.113883.6.1	Consultation note::Oncology
34806-0	2.16.840.1.113883.6.1	Evaluation and management note::Oncology
34807-8	2.16.840.1.113883.6.1	Consultation note::Ophthalmology
34808-6	2.16.840.1.113883.6.1	Evaluation and management note::Ophthalmology
34809-4	2.16.840.1.113883.6.1	Pre-operative evaluation and management note::Ophthalmol
34810-2	2.16.840.1.113883.6.1	Consultation note::Optometry
34811-0	2.16.840.1.113883.6.1	Evaluation and management note::Optometry
34812-8	2.16.840.1.113883.6.1	Consultation note::Oromaxillofacial surgery

34813-6	2.16.840.1.113883.6.1	Evaluation and management note::Oromaxillofacial surgery
34814-4	2.16.840.1.113883.6.1	Consultation note::Orthopedics
34815-1	2.16.840.1.113883.6.1	Evaluation and management note::Orthopedics
34816-9	2.16.840.1.113883.6.1	Consultation note::Otorhinolaryngology
34817-7	2.16.840.1.113883.6.1	Evaluation and management note::Otorhinolaryngology
34818-5	2.16.840.1.113883.6.1	Operative note::Otorhinolaryngology
34819-3	2.16.840.1.113883.6.1	Evaluation and management note::Pathology
34820-1	2.16.840.1.113883.6.1	Consultation note::Pharmacy
34821-9	2.16.840.1.113883.6.1	Evaluation and management note::Pharmacy
34822-7	2.16.840.1.113883.6.1	Consultation note::Physical medicine and rehabilitation
34823-5	2.16.840.1.113883.6.1	Evaluation and management note::Physical medicine and reh
34824-3	2.16.840.1.113883.6.1	Consultation note::Physical therapy
34825-0	2.16.840.1.113883.6.1	Evaluation and management note::Physical therapy
34826-8	2.16.840.1.113883.6.1	Consultation note::Plastic surgery
34827-6	2.16.840.1.113883.6.1	Evaluation and management note::Plastic surgery
34828-4	2.16.840.1.113883.6.1	Consultation note::Podiatry
34829-2	2.16.840.1.113883.6.1	Evaluation and management note::Podiatry
34830-0	2.16.840.1.113883.6.1	Evaluation and management note::Pulmonary
34831-8	2.16.840.1.113883.6.1	Consultation note::Radiation oncology
34832-6	2.16.840.1.113883.6.1	Evaluation and management note::Radiation oncology
34833-4	2.16.840.1.113883.6.1	Consultation note::Recreational therapy
34834-2	2.16.840.1.113883.6.1	Evaluation and management note::Recreational therapy
34835-9	2.16.840.1.113883.6.1	Consultation note::Rehabilitation
34836-7	2.16.840.1.113883.6.1	Evaluation and management note::Rehabilitation
34837-5	2.16.840.1.113883.6.1	Consultation note::Respiratory therapy
34838-3	2.16.840.1.113883.6.1	Evaluation and management note::Respiratory therapy
34839-1	2.16.840.1.113883.6.1	Consultation note::Rheumatology
34840-9	2.16.840.1.113883.6.1	Evaluation and management note::Rheumatology
34841-7	2.16.840.1.113883.6.1	Consultation note::Social work
34842-5	2.16.840.1.113883.6.1	Evaluation and management note::Social work
34843-3	2.16.840.1.113883.6.1	Group counseling note::Social work
34844-1	2.16.840.1.113883.6.1	Telephone encounter note:Outpatient:Social work
34845-8	2.16.840.1.113883.6.1	Consultation note::Speech therapy+Audiology
34846-6	2.16.840.1.113883.6.1	Evaluation and management note::Speech therapy+Audiology
34847-4	2.16.840.1.113883.6.1	Consultation note::Surgery
34848-2	2.16.840.1.113883.6.1	Evaluation and management note::Surgery
34849-0	2.16.840.1.113883.6.1	Consultation note::Thoracic surgery
34850-8	2.16.840.1.113883.6.1	Evaluation and management note:Outpatient:Thoracic surger
34851-6	2.16.840.1.113883.6.1	Consultation note::Urology
34852-4	2.16.840.1.113883.6.1	Evaluation and management note::Urology
34853-2	2.16.840.1.113883.6.1	Consultation note::Vascular surgery
34854-0	2.16.840.1.113883.6.1	Evaluation and management note:Outpatient:Vascular surger
34855-7	2.16.840.1.113883.6.1	Consultation note::Occupational therapy

34856-5	2.16.840.1.113883.6.1	Evaluation and management note::Anticoagulation
34857-3	2.16.840.1.113883.6.1	Evaluation and management note::Substance abuse
34858-1	2.16.840.1.113883.6.1	Evaluation and management note::Pain management
34859-9	2.16.840.1.113883.6.1	Evaluation and management note::Hyperlipidemia
34860-7	2.16.840.1.113883.6.1	Evaluation and management note::Hypertension
34861-5	2.16.840.1.113883.6.1	Evaluation and management note::Diabetology
34862-3	2.16.840.1.113883.6.1	Admission evaluation note:Inpatient:Attending physician.gen medicine
34863-1	2.16.840.1.113883.6.1	Post-operative evaluation and management note::General su
34864-9	2.16.840.1.113883.6.1	Counseling note::Mental health
34865-6	2.16.840.1.113883.6.1	Counseling note::Psychiatry
34866-4	2.16.840.1.113883.6.1	Counseling note::Psychology
34867-2	2.16.840.1.113883.6.1	Post-operative evaluation and management note:Outpatient:Ophthalmology
34868-0	2.16.840.1.113883.6.1	Operative note::Orthopedics
34869-8	2.16.840.1.113883.6.1	Counseling note::Pharmacy
34870-6	2.16.840.1.113883.6.1	Operative note::Plastic surgery
34871-4	2.16.840.1.113883.6.1	Operative note::Podiatry
34872-2	2.16.840.1.113883.6.1	Counseling note::Social work
34873-0	2.16.840.1.113883.6.1	Admission evaluation note::Surgery
34874-8	2.16.840.1.113883.6.1	Operative note::Surgery
34875-5	2.16.840.1.113883.6.1	Post-operative evaluation and management note::Surgery
34876-3	2.16.840.1.113883.6.1	Pre-operative evaluation and management note::Surgery
34877-1	2.16.840.1.113883.6.1	Operative note::Urology
34878-9	2.16.840.1.113883.6.1	Evaluation and management note::Emergency medicine
34879-7	2.16.840.1.113883.6.1	Consultation note::Endocrinology
34880-5	2.16.840.1.113883.6.1	Post-operative evaluation and management note::Nurse.surg
34881-3	2.16.840.1.113883.6.1	Pre-operative evaluation and management note::Nurse.surge
34895-3	2.16.840.1.113883.6.1	Education note
34896-1	2.16.840.1.113883.6.1	Interventional procedure note::Cardiology
34897-9	2.16.840.1.113883.6.1	Education note::Diabetology
34898-7	2.16.840.1.113883.6.1	Evaluation and management note::Endocrinology
34899-5	2.16.840.1.113883.6.1	Interventional procedure note::Gastroenterology
34900-1	2.16.840.1.113883.6.1	Subsequent evaluation note::General medicine
34901-9	2.16.840.1.113883.6.1	Subsequent evaluation note:Outpatient:General medicine
34902-7	2.16.840.1.113883.6.1	Education note:Outpatient:Gerontology
34903-5	2.16.840.1.113883.6.1	Note::Mental health
34904-3	2.16.840.1.113883.6.1	Subsequent evaluation note::Mental health
34905-0	2.16.840.1.113883.6.1	Evaluation and management note::Neurology
34906-8	2.16.840.1.113883.6.1	Note::Pastoral care
38932-0	2.16.840.1.113883.6.1	VA C&P exam.acromegaly
38933-8	2.16.840.1.113883.6.1	VA C&P exam.aid and attendance &or housebound
38934-6	2.16.840.1.113883.6.1	VA C&P exam.arrhythmias

38935-3	2.16.840.1.113883.6.1	VA C&P exam.miscellaneous arteries &or veins
38936-1	2.16.840.1.113883.6.1	VA C&P exam.audio
38937-9	2.16.840.1.113883.6.1	VA C&P exam.bones fractures &or bone disease
38938-7	2.16.840.1.113883.6.1	VA C&P exam.brain &or spinal cord
38939-5	2.16.840.1.113883.6.1	VA C&P exam.chronic fatigue syndrome
38940-3	2.16.840.1.113883.6.1	VA C&P exam.cold injury protocol
38941-1	2.16.840.1.113883.6.1	VA C&P exam.cranial nerves
38942-9	2.16.840.1.113883.6.1	VA C&P exam.cushings syndrome
38943-7	2.16.840.1.113883.6.1	VA C&P exam.dental &or oral
38944-5	2.16.840.1.113883.6.1	VA C&P exam.diabetes mellitus
38945-2	2.16.840.1.113883.6.1	VA C&P exam.miscellaneous digestive conditions
38946-0	2.16.840.1.113883.6.1	VA C&P exam.ear disease
38947-8	2.16.840.1.113883.6.1	VA C&P exam.mental health eating disorders
38948-6	2.16.840.1.113883.6.1	VA C&P exam.miscellaneous endocrine diseases
38949-4	2.16.840.1.113883.6.1	VA C&P exam.epilepsy &or narcolepsy
38950-2	2.16.840.1.113883.6.1	VA C&P exam.esophagus &or hiatal hernia
38951-0	2.16.840.1.113883.6.1	VA C&P exam.eye
38952-8	2.16.840.1.113883.6.1	VA C&P exam.feet
38953-6	2.16.840.1.113883.6.1	VA C&P exam.fibromyalgia
38954-4	2.16.840.1.113883.6.1	VA C&P exam.general medical
38955-1	2.16.840.1.113883.6.1	VA C&P exam.genitourinary
38956-9	2.16.840.1.113883.6.1	VA C&P exam.disability in gulf war veterans
38957-7	2.16.840.1.113883.6.1	VA C&P exam.gynecological conditions &or disorders of the b
38958-5	2.16.840.1.113883.6.1	VA C&P exam.hand &or thumb &or fingers
38959-3	2.16.840.1.113883.6.1	VA C&P exam.heart
38960-1	2.16.840.1.113883.6.1	VA C&P exam.hemic disorders
38961-9	2.16.840.1.113883.6.1	VA C&P exam.HIV-related illness
38962-7	2.16.840.1.113883.6.1	VA C&P exam.hypertension
38963-5	2.16.840.1.113883.6.1	VA C&P exam.infectious &or immune &or nutritional disabilit
38964-3	2.16.840.1.113883.6.1	VA C&P exam.initial evaluation post-traumatic stress disorder
38965-0	2.16.840.1.113883.6.1	VA C&P exam.large &or small intestines
38966-8	2.16.840.1.113883.6.1	VA C&P exam.extremity joints
38967-6	2.16.840.1.113883.6.1	VA C&P exam.liver &or gall bladder &or pancreas
38968-4	2.16.840.1.113883.6.1	VA C&P exam.lymphatic disorders
38969-2	2.16.840.1.113883.6.1	VA C&P exam.general mental disorders
38970-0	2.16.840.1.113883.6.1	VA C&P exam.mouth &or lips &or tongue
38971-8	2.16.840.1.113883.6.1	VA C&P exam.muscles
38972-6	2.16.840.1.113883.6.1	VA C&P exam.miscellaneous neurological disorders
38973-4	2.16.840.1.113883.6.1	VA C&P exam.nose &or sinus &or larynx &or pharynx
38974-2	2.16.840.1.113883.6.1	VA C&P exam.peripheral nerves
38975-9	2.16.840.1.113883.6.1	VA C&P exam.prisoner of war protocol
38976-7	2.16.840.1.113883.6.1	VA C&P exam.pulmonary tuberculosis &or mycobacterial dise
38977-5	2.16.840.1.113883.6.1	VA C&P exam.rectum &or anus

38978-3	2.16.840.1.113883.6.1	VA C&P exam.residuals of amputations
38979-1	2.16.840.1.113883.6.1	VA C&P exam.obstructive &or restrictive &or interstitial respi diseases
38980-9	2.16.840.1.113883.6.1	VA C&P exam.miscellaneous respiratory diseases
38981-7	2.16.840.1.113883.6.1	VA C&P exam.review evaluation post-traumatic stress disorde
38982-5	2.16.840.1.113883.6.1	VA C&P exam.scars
38983-3	2.16.840.1.113883.6.1	VA C&P exam.sense of smell &or taste
38984-1	2.16.840.1.113883.6.1	VA C&P exam.skin diseases other than scars
38985-8	2.16.840.1.113883.6.1	VA C&P exam.social &or industrial survey
38986-6	2.16.840.1.113883.6.1	VA C&P exam.spine
38987-4	2.16.840.1.113883.6.1	VA C&P exam.stomach &or duodenum &or peritoneal adhesi
38988-2	2.16.840.1.113883.6.1	VA C&P exam.thyroid &or parathyroid diseases
44943-9	2.16.840.1.113883.6.1	Self management:^Patient
47039-3	2.16.840.1.113883.6.1	Admission history and physical note:Inpatient
47040-1	2.16.840.1.113883.6.1	Confirmatory consultation note
47041-9	2.16.840.1.113883.6.1	Confirmatory consultation note:Inpatient
47042-7	2.16.840.1.113883.6.1	Counseling note
47043-5	2.16.840.1.113883.6.1	Group counseling note
47044-3	2.16.840.1.113883.6.1	Initial evaluation note:Inpatient
47045-0	2.16.840.1.113883.6.1	Study report
47046-8	2.16.840.1.113883.6.1	Summary of death
47047-6	2.16.840.1.113883.6.1	Supervisory note
47048-4	2.16.840.1.113883.6.1	Diagnostic interventional study report:Interventional radiolog
47049-2	2.16.840.1.113883.6.1	Communication::Non-patient
47420-5	2.16.840.1.113883.6.1	Functional status assessment

```
Black = required markup and all delimiters, e.g., =, “”
Red = fixed content, enter exactly as shown
Blue = optional elements, attributes or content
Green = variable – new content is required
```

Supporting Template Example

```
<observation classCode="OBS" moodCode="EVN">
   <templateId root="2.16.840.1.113883.10.20.1.18" />
      <!--  Alert observation template -->
   <id root="IDGoesHere" />
   <code code="ASSERTION" codeSystem="2.16.840.1.113883.5.4" />
   <statusCode code="completed" />
   <value xsi:type="CD" code="282100009" codeSystem="2.16.840.1.113883.6.96"
displayName="Adverse reaction to substance" />
   <participant typeCode="CSM">
      <participantRole classCode="MANU">
         <playingEntity classCode="MMAT">
            <code code="70618" codeSystem="2.16.840.1.113883.6.88"
displayName="Penicillin" />
         </playingEntity>
      </participantRole>
   </participant>
```

```
   <entryRelationship typeCode="MFST" inversionInd="true">
      <observation classCode="OBS" moodCode="EVN">
         <templateId root="2.16.840.1.113883.10.20.1.54" />
            <!-- Reaction observation template  -->
         <code code="ASSERTION" codeSystem="2.16.840.1.113883.5.4" />
         <statusCode code="completed" />
         <value xsi:type="CD" code="247472004" codeSystem="2.16.840.1.113883.6.96"
displayName="Hives" />
      </observation>
   </entryRelationship>
   <!-- Alert status observation template goes here -->
</observation>
```

Purpose Entry Example

In this example, the purpose of the document is transfer of care.

```
<entry typeCode="DRIV">
   <act classCode="ACT" moodCode="EVN">
      <templateId root='2.16.840.1.113883.10.20.1.30'/>
         <!-- Purpose activity template -->
      <code code="23745001" codeSystem="2.16.840.1.113883.6.96"
displayName="Documentation procedure"/>
      <statusCode code="completed"/>
      <entryRelationship typeCode="RSON">
         <act classCode="ACT" moodCode="EVN">
            <code code="308292007" codeSystem="2.16.840.1.113883.6.96"
displayName="Transfer of care"/>
            <statusCode code="completed"/>
         </act>
      </entryRelationship>
   </act>
</entry>
```

Problem Entry Example

This example shows a problem act with an entryRelationship to an observation of asthma active now and since 1950.

```
<entry typeCode="DRIV">
   <act classCode="ACT" moodCode="EVN">
      <templateId root='2.16.840.1.113883.10.20.1.27'/>
         <!-- Problem act template -->
      <id root="IDGoesHere"/>
      <code nullFlavor="NA"/>
      <entryRelationship typeCode="SUBJ">
         <observation classCode="OBS" moodCode="EVN">
            <templateId root='2.16.840.1.113883.10.20.1.28'/>
               <!-- Problem observation template -->
            <id root="IDGoesHere"/>
            <code code="ASSERTION" codeSystem="2.16.840.1.113883.5.4"/>
            <statusCode code="completed"/>
            <effectiveTime>
               <low value="1950"/>
            </effectiveTime>
            <value xsi:type="CD" code="195967001"
codeSystem="2.16.840.1.113883.6.96" displayName="Asthma"/>
            <entryRelationship typeCode="REFR">
               <observation classCode="OBS" moodCode="EVN">
                  <templateId root='2.16.840.1.113883.10.20.1.50'/>
                     <!-- Problem status observation template -->
```

```
                    <code code="11323-3" codeSystem="2.16.840.1.113883.6.1"
displayName="Status"/>
                    <statusCode code="completed"/>
                    <value xsi:type="CE" code="55561003"
codeSystem="2.16.840.1.113883.6.96" displayName="Active"/>
                </observation>
            </entryRelationship>
        </observation>
    </entryRelationship>
  </act>
</entry>
```

Procedure Example

This example illustrates a total hip replacement procedure done on the left hip in 1998, including the identifier of the device manufacturer.

```
<entry typeCode="DRIV">
   <procedure classCode="PROC" moodCode="EVN">
      <templateId root="2.16.840.1.113883.10.20.1.29"/>
         <!-- Procedure activity template -->
      <id root="IDGoesHere"/>
      <code code="52734007" codeSystem="2.16.840.1.113883.6.96" displayName="Total
hip replacement">
         <qualifier>
            <name code="272741003" displayName="Laterality"/>
            <value code="7771000" displayName="Left"/>
         </qualifier>
      </code>
      <statusCode code="completed"/>
      <effectiveTime value="1998"/>
      <participant typeCode="DEV">
         <participantRole classCode="MANU">
            <templateId root="2.16.840.1.113883.10.20.1.52"/>
               <!-- Product instance template -->
            <id root="IDGoesHere"/>
         </participantRole>
      </participant>
   </procedure>
</entry>
```

Family History Example

This example shows a family history about the patient's natural father, born in 1912, identified as the subject by an **organizer**. A **component** within the **organizer** contains a family history **observation** of myocardial infarction (MI) as the cause of death at age 57.

```
<entry typeCode="DRIV">
   <organizer moodCode="EVN" classCode="CLUSTER">
      <templateId root="2.16.840.1.113883.10.20.1.23"/>
         <!-- Family history organizer template -->
      <statusCode code="completed"/>
      <subject>
         <relatedSubject classCode="PRS">
            <code code="9947008" codeSystem="2.16.840.1.113883.6.96"
displayName="Natural father"/>
            <subject>
               <administrativeGenderCode code="M"
codeSystem="2.16.840.1.113883.5.1" displayName="Male"/>
               <birthTime value="1912"/>
```

```
            </subject>
         </relatedSubject>
      </subject>
      <component>
         <observation classCode="OBS" moodCode="EVN">
            <templateId root="2.16.840.1.113883.10.20.1.22"/>
               <!-- Family history observation template -->
            <id root="IDGoesHere"/>
            <code code="ASSERTION" codeSystem="2.16.840.1.113883.5.4"/>
            <statusCode code="completed"/>
            <value xsi:type="CD" code="22298006"
codeSystem="2.16.840.1.113883.6.96" displayName="MI"/>
            <entryRelationship typeCode="CAUS">
               <observation classCode="OBS" moodCode="EVN">
                  <templateId root="2.16.840.1.113883.10.20.1.42"/>
                     <!-- Family history cause of death observation template -->
                  <id root="IDGoesHere"/>
                  <code code="ASSERTION" codeSystem="2.16.840.1.113883.5.4"/>
                  <statusCode code="completed"/>
                  <value xsi:type="CD" code="419099009"
codeSystem="2.16.840.1.113883.6.96" displayName="Dead"/>
               </observation>
            </entryRelationship>
            <entryRelationship typeCode="SUBJ" inversionInd="true">
               <observation classCode="OBS" moodCode="EVN">
                  <templateId root="2.16.840.1.113883.10.20.1.38"/>
                     <!-- Age observation template -->
                  <code code="397659008 " codeSystem="2.16.840.1.113883.6.96"
displayName="Age"/>
                  <statusCode code="completed"/>
                  <value xsi:type="INT" value="57"/>
               </observation>
            </entryRelationship>
         </observation>
      </component>
   </organizer>
</entry>
```

Social History Example

This example uses the social history observation template and describes a history of smoking a pack of cigarettes per day that lasted from 1947 to 1972.

```
<entry typeCode="DRIV">
   <observation classCode="OBS" moodCode="EVN">
      <templateId root="2.16.840.1.113883.10.20.1.33"/>
         <!-- Social history observation template -->
      <id root="IDGoesHere"/>
      <code code="230056004" codeSystem="2.16.840.1.113883.6.96"
displayName="Cigarette smoking"/>
      <statusCode code="completed"/>
      <effectiveTime>
         <low value="1947"/>
         <high value="1972"/>
      </effectiveTime>
      <value xsi:type="ST">1 pack per day</value>
   </observation>
</entry>
```

Payers Example

This example describes self-insured coverage with authorization for a colonoscopy.

```
<entry typeCode="DRIV">
   <act classCode="ACT" moodCode="EVN">
      <templateId root='2.16.840.1.113883.10.20.1.20'/>
         <!-- Coverage activity template -->
      <id root="IDGoesHere"/>
      <code code="48768-6" codeSystem="2.16.840.1.113883.6.1"
displayName="Financing and insurance"/>
      <statusCode code="completed"/>
      <entryRelationship typeCode="COMP">
         <act classCode="ACT" moodCode="EVN">
            <templateId root='2.16.840.1.113883.10.20.1.26'/>
               <!-- Policy activity template -->
            <id root="IDGoesHere"/>
            <code code="EHCPOL" codeSystem="2.16.840.1.113883.5.4"
displayName="Extended healthcare"/>
            <statusCode code="completed"/>
            <performer typeCode="PRF">
               <assignedEntity>
                  <id root="IDGoesHere"/>
                  <representedOrganization>
                     <name>Good Health Insurance</name>
                  </representedOrganization>
               </assignedEntity>
            </performer>
            <participant typeCode="COV">
               <participantRole>
                  <id root="IDGoesHere"/>
                  <code code="SELF" codeSystem="2.16.840.1.113883.5.111"
displayName="Self"/>
               </participantRole>
            </participant>
            <entryRelationship typeCode="REFR">
               <act classCode="ACT" moodCode="EVN">
                  <templateId root='2.16.840.1.113883.10.20.1.19'/>
                     <!-- Authorization activity template -->
                  <id root="IDGoesHere"/>
                  <code nullFlavor="NA"/>
                  <entryRelationship typeCode="SUBJ">
                     <procedure classCode="PROC" moodCode="PRMS">
                        <code code="73761001" codeSystem="2.16.840.1.113883.6.96"
displayName="Colonoscopy"/>
                     </procedure>
                  </entryRelationship>
               </act>
            </entryRelationship>
         </act>
      </entryRelationship>
   </act>
</entry>
```

Advance Directive Example

This description of a “Do not resuscitate” order is verified, current and links to a PDF document.

```
<entry typeCode="DRIV">
   <observation classCode="OBS" moodCode="EVN">
      <templateId root='2.16.840.1.113883.10.20.1.17'/>
```

```
         <!-- Advance directive observation template -->
      <id root="IDGoesHere"/>
      <code code="304251008" codeSystem="2.16.840.1.113883.6.96"
displayName="Resuscitation"/>
      <statusCode code="completed"/>
      <value xsi:type="CD" code="304253006" codeSystem="2.16.840.1.113883.6.96"
displayName="Do not resuscitate">
         <originalText><reference value="#AD1"/></originalText>
      </value>
      <participant typeCode="VRF">
         <templateId root='2.16.840.1.113883.10.20.1.58'/>
            <!-- Verification of an advance directive observation template -->
         <time value="19991107"/>
         <participantRole>
            <id root="IDGoesHere"/>
         </participantRole>
      </participant>
      <entryRelationship typeCode="REFR">
         <observation classCode="OBS" moodCode="EVN">
            <templateId root='2.16.840.1.113883.10.20.1.37'/>
               <!-- Advance directive status observation template -->
            <code code="33999-4" codeSystem="2.16.840.1.113883.6.1"
displayName="Status"/>
            <statusCode code="completed"/>
            <value xsi:type="CE" code="15240007"
codeSystem="2.16.840.1.113883.6.96" displayName="Current and verified"/>
         </observation>
      </entryRelationship>
      <reference typeCode="REFR">
         <templateId root='2.16.840.1.113883.10.20.1.36'/>
            <!-- Advance directive reference template -->
         <externalDocument>
            <id root="IDGoesHere"/>
            <code code="371538006" codeSystem="2.16.840.1.113883.6.96"
displayName="Advance directive"/>
            <text mediaType="application/pdf">
               <reference value="AdvanceDirective.someIDhere.pdf"/>
            </text>
         </externalDocument>
      </reference>
   </observation>
</entry>
```

Alerts Example

This alert asserts an allergic reaction to the manufactured material penicillin that manifests as hives.

```
<entry typeCode="DRIV">
   <act classCode="ACT" moodCode="EVN">
      <templateId root='2.16.840.1.113883.10.20.1.27'/>
         <!-- Problem act template -->
      <id root="IDGoesHere"/>
      <code nullFlavor="NA"/>
      <entryRelationship typeCode="SUBJ">
         <observation classCode="OBS" moodCode="EVN">
            <templateId root='2.16.840.1.113883.10.20.1.18'/>
               <!-- Alert observation template -->
            <id root="IDGoesHere"/>
            <code code="ASSERTION" codeSystem="2.16.840.1.113883.5.4"/>
```

```
            <statusCode code="completed"/>
            <value xsi:type="CD" code="282100009"
codeSystem="2.16.840.1.113883.6.96" displayName="Adverse reaction to substance"/>
            <participant typeCode="CSM">
               <participantRole classCode="MANU">
                  <playingEntity classCode="MMAT">
                     <code code="70618" codeSystem="2.16.840.1.113883.6.88"
displayName="Penicillin"/>
                  </playingEntity>
               </participantRole>
            </participant>
            <entryRelationship typeCode="MFST" inversionInd="true">
               <observation classCode="OBS" moodCode="EVN">
                  <templateId root='2.16.840.1.113883.10.20.1.54'/>
                     <!-- Reaction observation template -->
                  <code code="ASSERTION" codeSystem="2.16.840.1.113883.5.4"/>
                  <statusCode code="completed"/>
                  <value xsi:type="CD" code="247472004"
codeSystem="2.16.840.1.113883.6.96" displayName="Hives"/>
               </observation>
            </entryRelationship>
            <entryRelationship typeCode="REFR">
               <observation classCode="OBS" moodCode="EVN">
                  <templateId root='2.16.840.1.113883.10.20.1.39'/>
                     <!-- Alert status observation template -->
                  <code code="33999-4" codeSystem="2.16.840.1.113883.6.1"
displayName="Status"/>
                  <statusCode code="completed"/>
                  <value xsi:type="CE" code="55561003"
codeSystem="2.16.840.1.113883.6.96" displayName="Active"/>
               </observation>
            </entryRelationship>
         </observation>
      </entryRelationship>
   </act>
</entry>
```

Medication Example

In the example below, the patient is actively taking an albuterol inhalant for wheezing.

```
<entry typeCode="DRIV">
   <substanceAdministration classCode="SBADM" moodCode="EVN">
      <templateId root="2.16.840.1.113883.10.20.1.24"/>
      <!-- Medication activity template -->
      <id root="IDGoesHere"/>
      <text><reference value="#ReferenceGoesHere"></reference></text>
      <statusCode code="active"/>
      <effectiveTime xsi:type="PIVL_TS">
         <period value="6" unit="h"/>
      </effectiveTime>
      <routeCode code="IPINHL" codeSystem="2.16.840.1.113883.5.112"
codeSystemName="RouteOfAdministration" displayName="Inhalation, oral"/>
      <doseQuantity value="2"/>
      <administrationUnitCode code="415215001" codeSystem="2.16.840.1.113883.6.96"
displayName="Puff"/>
      <consumable>
         <manufacturedProduct>
            <templateId root="2.16.840.1.113883.10.20.1.53"/>
```

```
            <!-- Product template -->
            <manufacturedMaterial>
               <code code="307782" codeSystem="2.16.840.1.113883.6.88"
displayName="Albuterol 0.09 MG/ACTUAT inhalant solution" codeSystemName="RxNorm">
                  <originalText>Albuterol inhalant</originalText>
                  <translation code="647298" codeSystem="2.16.840.1.113883.6.88"
displayName="Albuterol 0.09 MG/ACTUAT Inhalant Solution [Pro-Air Albuterol]"
codeSystemName="RxNorm"></translation>
               </code>
               <name>Pro-Air Albuterol</name>
            </manufacturedMaterial>
         </manufacturedProduct>
      </consumable>
      <precondition typeCode="PRCN">
         <criterion>
            <code code="ASSERTION" codeSystem="2.16.840.1.113883.5.4"/>
            <value xsi:type="CE" code="56018004"
codeSystem="2.16.840.1.113883.6.96" displayName="Wheezing"/>
         </criterion>
      </precondition>
   </substanceAdministration>
</entry>
```

Immunization Example

In this example, an immunization tracking system has supplied a record of administration of flu vaccine in November 1999.

```
<author>
   <time value="20000407130000+0500"/>
   <assignedAuthor>
      <id root="IDGoesHere"/>
      <assignedAuthoringDevice>
         <softwareName>Immunization Tracking System</softwareName>
      </assignedAuthoringDevice>
      <representedOrganization>
         <id root="2.16.840.1.113883.19.5"/>
      </representedOrganization>
   </assignedAuthor>
</author>
<entry typeCode="DRIV">
   <substanceAdministration classCode="SBADM" moodCode="EVN">
      <templateId root="2.16.840.1.113883.10.20.1.24"/>
         <!-- Medication activity template -->
      <id root="IDGoesHere"/>
      <statusCode code="completed"/>
      <effectiveTime xsi:type="IVL_TS"><center value="199911"/></effectiveTime>
      <consumable>
         <manufacturedProduct>
            <templateId root="2.16.840.1.113883.10.20.1.53"/>
               <!-- Product template -->
            <manufacturedMaterial>
               <code code="88" codeSystem="2.16.840.1.113883.6.59"
displayName="Influenza virus vaccine">
                  <originalText>Influenza virus vaccine</originalText>
               </code>
            </manufacturedMaterial>
         </manufacturedProduct>
      </consumable>
   </substanceAdministration>
```

```
</entry>
```

Medical Equipment Example

This example describes a device implanted in November, 1999.

```
<entry typeCode="DRIV">
   <supply classCode="SPLY" moodCode="EVN">
      <templateId root="2.16.840.1.113883.10.20.1.34"/>
         <!-- Supply activity template -->
      <id root="IDGoesHere"/>
      <statusCode code="completed"/>
      <effectiveTime xsi:type="IVL_TS"><center value="199911"/></effectiveTime>
      <participant typeCode="DEV">
         <participantRole classCode="MANU">
            <templateId root="2.16.840.1.113883.10.20.1.52"/>
               <!-- Product instance template -->
            <playingDevice>
               <code code="72506001" codeSystem="2.16.840.1.113883.6.96"
displayName="Automatic implantable cardioverter/defibrillator"/>
            </playingDevice>
         </participantRole>
      </participant>
   </supply>
</entry>
```

Vital Signs Example

This example shows height recorded as 177 cm on November 14, 1999.

```
<entry typeCode="DRIV">
   <organizer classCode="CLUSTER" moodCode="EVN">
      <templateId root="2.16.840.1.113883.10.20.1.35"/>
         <!-- Vital signs organizer template -->
      <id root="IDGoesHere"/>
      <code code="46680005" codeSystem="2.16.840.1.113883.6.96" displayName="Vital
signs"/>
      <statusCode code="completed"/>
      <effectiveTime value="19991114"/>
      <component>
         <observation classCode="OBS" moodCode="EVN">
            <templateId root="2.16.840.1.113883.10.20.1.31"/>
               <!-- Result observation template -->
            <id root="IDGoesHere"/>
            <code code="50373000" codeSystem="2.16.840.1.113883.6.96"
displayName="Body height"/>
            <statusCode code="completed"/>
            <effectiveTime value="19991114"/>
            <value xsi:type="PQ" value="177" unit="cm"/>
         </observation>
      </component>
   </organizer>
```

</entry>

Functional Status Example

This example asserts “dependence on cane” since 1998.

```
<entry typeCode="DRIV">
   <act classCode="ACT" moodCode="EVN">
      <templateId root='2.16.840.1.113883.10.20.1.27'/>
         <!-- Problem act template -->
```

```
      <id root="IDGoesHere"/>
      <code nullFlavor="NA"/>
      <entryRelationship typeCode="SUBJ">
         <observation classCode="OBS" moodCode="EVN">
            <templateId root='2.16.840.1.113883.10.20.1.28'/>
               <!-- Problem observation template -->
            <id root="IDGoesHere"/>
            <code code="ASSERTION" codeSystem="2.16.840.1.113883.5.4"/>
            <statusCode code="completed"/>
            <effectiveTime><low value="1998"/></effectiveTime>
            <value xsi:type="CD" code="105504002"
codeSystem="2.16.840.1.113883.6.96" displayName="Dependence on cane"/>
            <entryRelationship typeCode="REFR">
               <observation classCode="OBS" moodCode="EVN">
                  <templateId root='2.16.840.1.113883.10.20.1.44'/>
                     <!-- Status of functional status observation template -->
                  <code code="33999-4" codeSystem="2.16.840.1.113883.6.1"
displayName="Status"/>
                  <statusCode code="completed"/>
                  <value xsi:type="CE" code="55561003"
codeSystem="2.16.840.1.113883.6.96" displayName="Active"/>
               </observation>
            </entryRelationship>
         </observation>
      </entryRelationship>
   </act>
</entry>
```

Result Organizer Example

The example below shows an organizer for a battery of results, in this case, a complete blood count (CBC) "without differential." The individual results in the CBC will be represented as observations nested under the organizer element.

```
<organizer classCode="BATTERY" moodCode="EVN">
   <templateId root="2.16.840.1.113883.10.20.1.32"/>
      <!-- Result organizer template -->
   <id root="someIdString"/>
   <code code="43789009" codeSystem="2.16.840.1.113883.6.96" displayName="CBC WO
DIFFERENTIAL"/>
   <statusCode code="completed"/>
   <effectiveTime value="200003231430"/>
   <component>
      <observation classCode="OBS" moodCode="EVN">
         . . .
      </observation>
   </component>
</organizer>
```

Result Observation Example

The example below illustrates a completed hemoglobin result from a specimen collected at 2:30 pm on March 23, 2000. The value of the result is 13.2 g/dl, which is normal, i.e., it falls within the indicated reference range:

```
<observation classCode="OBS" moodCode="EVN">
   <templateId root="2.16.840.1.113883.10.20.1.31"/>
      <!-- Result observation template -->
   <id root="someIdString"/>
   <code code="30313-1" codeSystem="2.16.840.1.113883.6.1" displayName="HGB"/>
```

```
      <statusCode code="completed"/>
      <effectiveTime value="200003231430"/>
      <value xsi:type="PQ" value="13.2" unit="g/dl"/>
      <interpretationCode code="N" codeSystem="2.16.840.1.113883.5.83"/>
      <methodCode code="14104" codeSystem=" 2.16.840.1.113883.5.84">
         <referenceRange>
            <observationRange>
               <text>M 13-18 g/dl; F 12-16 g/dl</text>
            </observationRange>
         </referenceRange>
      </methodCode>
   </observation>
```

Encounter Example

This example records a general encounter on April 7, 2000 at Good Health Clinic.

```
   <entry typeCode="DRIV">
      <encounter classCode="ENC" moodCode="EVN">
         <templateId root="2.16.840.1.113883.10.20.1.21"/>
            <!-- Encounter activity template -->
         <id root="IDGoesHere"/>
         <code code="GENRL" codeSystem="2.16.840.1.113883.5.4" displayName="General">
            <originalText>Checkup Examination</originalText>
         </code>
         <effectiveTime value="20000407"/>
         <participant typeCode="LOC">
            <templateId root="2.16.840.1.113883.10.20.1.45"/>
               <!-- Location participation template -->
            <participantRole classCode="SDLOC">
               <id root="IDGoesHere"/>
               <playingEntity classCode="PLC">
                  <name>Good Health Clinic</name>
               </playingEntity>
            </participantRole>
         </participant>
      </encounter>
   </entry>
```

Plan of Care Example

The following example shows a Plan of Care with an **observation** activity in request mood ordering a pulmonary function test.

```
<entry typeCode="DRIV">
   <observation classCode="OBS" moodCode="RQO">
      <templateId root="2.16.840.1.113883.10.20.1.25"/>
         <!-- Plan of Care Activity template -->
      <id root="someIdString"/>
      <code code="23426006" codeSystem="2.16.840.1.113883.6.96" displayName="Pulmonary
function test"/>
      <statusCode code="new"/>
      <effectiveTime><center value="20000421"/></effectiveTime>
   </observation>
</entry>
```

Interim note: *An example CCD with indications of Healthix import limitations will be included in the near future.*

9 Error Handling

The Healthix web service response to each IHE message indicates either successful message processing or an error condition.

Success example:

```
<XMLMessage>
    <ContentStream>
        <RegistryResponse xmlns="urn:oasis:names:tc:ebxml-regrep:xsd:rs:3.0"
        xmlns:xsi="http://www.w3.org/2001/XMLSchema-instance"
        status="urn:oasis:names:tc:ebxml-regrep:ResponseStatusType:Success"
        xsi:schemaLocation="urn:oasis:names:tc:ebxml-regrep:xsd:rs:3.0 ../schema/ebRS/rs.xsd"/>
    </ContentStream>
</XMLMessage>
```

Error condition examples**:**

- **No response from web service** – Always wait at least 30 seconds for a response from the web service. If no response is received within 30 seconds, retry the request until a response is received. If no response is received within 30 minutes, contact Healthix Technical Support.
- **Error in response from web service** – Always contact Healthix Technical Support upon receiving a web service error.

```
<soap:Envelope xmlns:soap="http://www.w3.org/2003/05/soap-envelope">
    <soap:Body>
        <ns2:RegistryResponse status="urn:oasis:names:tc:ebxml-regrep:ResponseStatusType:Failure"
        xmlns="urn:oasis:names:tc:ebxml-regrep:xsd:rim:3.0" xmlns:ns2="urn:oasis:names:tc:ebxml-regrep:xsd:rs:3.0"
        xmlns:ns3="urn:oasis:names:tc:ebxml-regrep:xsd:lcm:3.0" xmlns:ns4="urn:ihe:iti:xds-b:2007"
        xmlns:ns5="urn:oasis:names:tc:ebxml-regrep:xsd:query:3.0">
            <ns2:RegistryErrorList highestSeverity="urn:oasis:names:tc:ebxml-regrep:ErrorSeverityType:Error">
                <ns2:RegistryError codeContext="Unknown Patient Id specified in request"
                errorCode="XDSUnknownPatientId" severity="urn:oasis:names:tc:ebxml-regrep:ErrorSeverityType:Error"/>
            </ns2:RegistryErrorList>
        </ns2:RegistryResponse>
    </soap:Body>
</soap:Envelope>
```

10 Glossary

Consolidated Clinical Document Architecture (C-CDA)

C-CDA is a set of HL7 standards that specify both the structure and semantics of xml-based “clinical documents” for the purpose of exchanging clinical data, represented in the HL7 CDA Release 2 standards. As its name conveys, C-CDA is an effort by HL7 to constrain the numerous and overlapping standards of the legacy CDA standard. C-CDA reuses a set of section and entry templates that form the interoperable parts of nine document templates. C-CDA documents derive their machine-processable meaning from the HL7 Reference Information Model (RIM) and use the

HL7 Release 2 data types. C-CDA may be used to express nine types of clinical documents based on different use cases:

- Continuity of Care Document (CCD)
- Consultation Note
- Diagnostic Imaging Report
- Discharge Summary
- History and Physical Note
- Operative Note
- Procedure Note
- Progress Note
- Unstructured Document

A C-CDA document may contain many data sections. Each section may contain both narrative (i.e. human-readable) text and, possibly, machine-processable data. In this document, Section 6 - CCD Output Options highlights the C-CDA data sections which Healthix currently supports.

Clinical Document Architecture (CDA)

CDA is an HL7 document markup standard that specifies both the structure and semantics of xml-based "clinical documents" for the purpose of exchanging clinical data. CDA documents derive their machine-processable meaning from the HL7 Reference Information Model (RIM) and use the HL7 Release 2 data types. CDA may be used to express many types of clinical documents based on different use cases, such as the following:

- Continuity of Care Document (CCD) (e.g. HITSP C32)
- Discharge Summary (e.g. HITSP C48)
- History and Physical (e.g. HITSP C84)
- Lab Report (e.g. HITSP C37)

A CDA document may contain many data sections. Each section may contain both narrative (i.e. human-readable) text and, possibly, machine-processable data. In this document, Section 6 - CCD Output Options highlights the CDA data sections which Healthix currently supports.

Continuity of Care Document (CCD)

A CCD is one type of C-CDA document. "Continuity of Care Document" is a generic term to describe a clinical document that can provide the basic health information history of a patient, most recent patient demographics, patient problem list, patient encounters, patient medications, and patient labs. The CCD has been standardized by multiple standards development organizations, including HL7 and HITSP. All of the standards reflect a flexible set of optionally included data sets and, thus, the CCD can be used to conform to the broad range of data required to be exchanged to achieve Meaningful Use. The C-CDA CCD standard specifies the required and optional sections to include in a CCD.

Enterprise Master Patient Index (EMPI) Identifier

Healthix assigns unique patients a single master identifier, the EMPI, and links all MRNs for that patient to the EMPI. The EMPI is the identifier that is returned in Healthix's response to a PIX query.

Health Information Technology Standards Panel (HITSP) CDA Content Modules (C83)

HITSP was a private-public committee chartered by the American National Standards Institute from 2005-2010 to harmonize standards. They developed a library of sections that can be combined into various CDA document types. This library is referred to as Component 83 (C83). Each section defined in C83 is optional, meaning that a valid document type made up of specific sections in C83 can include additional sections that are not specified in the document template. For example, a CCD could add a section entitled "Reason for Referral," and it would remain a valid CCD.

HITSP CCD (C32)

The HITSP CCD Component 32 (C32) may include both administrative information, (e.g., registration, demographics, insurance, etc.), and clinical information, (e.g., problem list, medication list, allergies, test results, etc.).

The C32 use case includes 17 sections that pertain to the transfer of care of a patient.

Healthix appreciates that the HITSP C32 patient summary document may be interpreted in multiple ways, and to that end Healthix supports the CCD (C32) as both of the following:

- Patient summary document
- Means of transport for a transaction messaging system.

Medical Record Number (MRN)

The Medical Record Number (MRN) is a unique ID by which a healthcare facility identifies a patient. When a new patient arrives for an encounter at a facility, an MRN is created for that patient. Thereafter, that facility attaches the patient's MRN to all electronic messages that are sent pertaining to the care of that patient.

When Healthix receives a new MRN in a message from a participant facility, it adds that MRN to its database together with additional parameters describing the patient. If the same MRN arrives in another message from the same facility, Healthix can immediately identify the patient and attach the new information to that patient in the database. Healthix uses an algorithm to determine whether incoming data from a different facility pertains to the same named patient or a different one. If there is a positive match based up the provided patient demographic parameters, Healthix adds the second facility's MRN to its database and maps both MRNs to the same patient.

Consider a situation in which multiple healthcare facilities are grouped within a single participant. In this case, each facility can maintain its own database with its own system of unique MRNs to identify patient data. Thus, a patient with encounters at multiple facilities within a single participant can have a different MRN for each facility. To simplify the processing of electronic messages for its patients, such a participant can map a patient's different MRNs to a single identification code or master identifier. For example, when a provider within that group sends an electronic message to Healthix, rather than send the facility's MRN for that patient, the system looks up the MRN and replaces it with the patient's master identifier. Then, the message is dispatched to Healthix. Healthix

interprets the master identifier as a supplement to the MRNs that are linked within it, ensuring that they are also linked in Healthix.